YOLINK

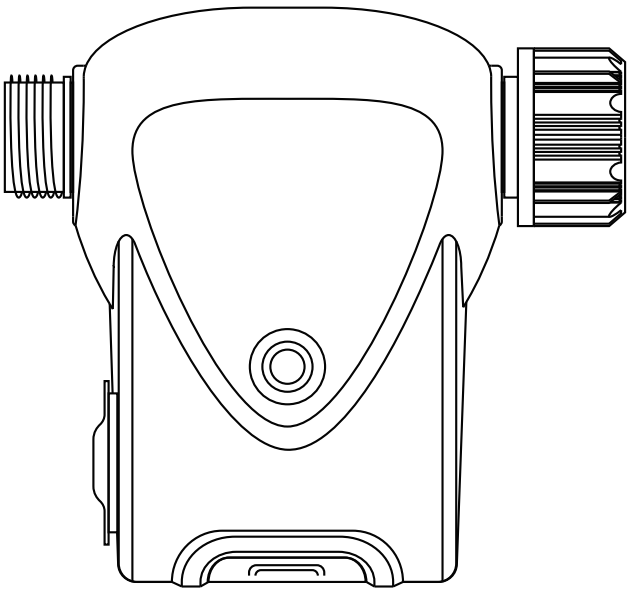

Smart Sprinkler Timer

YS4103-UC

Installation & User Guide

Revision Jun. 02, 2026

TABLE OF CONTENTS

A . Welcome! 01
B . Before You Begin 02
C . In the Box 04
D . Get to Know Your Sprinkler Timer 05
E . Install the App 06

F . Add Your Sprinkler Timer to the App 07
G . Installation and Power Up 09
H . App Functions: Device Screen 13
I . App Functions: Device Details Screen 15
J . App Functions: Schedule 17

K . App Functions: Timer 18
L . App Functions: Alarm Strategy Screen 19
M . App Functions: Automation 21
N . Control-D2D 22
O . Factory Reset 25

P . Firmware Update 26
Q . Specifications 27
R . Warnings 29
S . Warranty 31
T . FCC Statement 32

U . Contact Us 34

A Welcome!

Thank you for purchasing YoLink products! We appreciate you trusting YoLink for your smart home & automation needs. Your 100% satisfaction is our goal. If you experience any problems with your installation, with our products or if you have any questions that this manual does not answer, please contact us right away. See the Contact Us section for more info.

Thank you!

YoLink Customer Support

User Guide Conventions

The following icons are used in this guide to convey specific types of information:

⚠️ Very important information (can save you time!)

🤔 Good to know info but may not apply to you

B Before You Begin

Visit our Smart Sprinkler Timer support page on our website, for the latest installation guides, additional resources, information and videos by visiting:

https://www.yosmart.com/support/YS4103-UC

Or by scanning the QR code:

Download the most current version of the user guide by scanning the QR code:

B Before You Begin, Continued

Your Smart Sprinkler Timer connects to the internet via one of our hubs, and it does not connect directly to your WiFi or local network. In order for remote access to the device from the app, and for full-functionality, a hub is required. This guide assumes the YoLink app has been installed on your phone, and a YoLink Hub or SpeakerHub is installed and online.

If installing the Smart Sprinkler Timer, please refer to the environmental range information in the specifications found on the Smart Sprinkler Timer product support page. While this product can be installed outdoors, to ensure years of trouble-free operation, it should be protected from rain and direct sunlight by an enclosure or overhead cover.

C In the Box

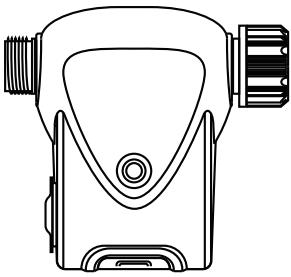

Sprinkler Timer

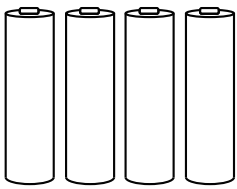

4 x AA Batteries (Pre-Installed)

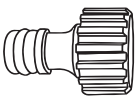

Water Outlet Connector

3/4 Inch to 1/2 Inch Connector

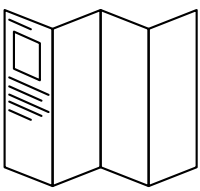

Water Outlet Connector

Screw

D Get to Know Your Smart Sprinkler Timer

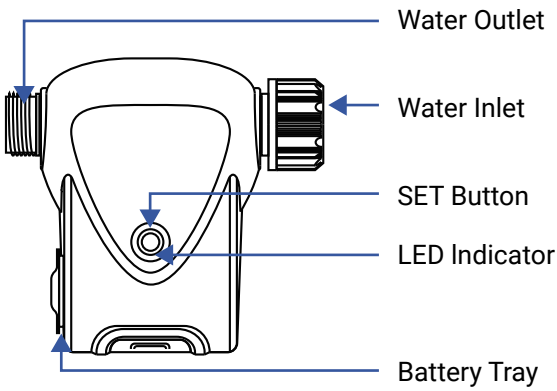

LED Behaviors

Blinking Red Once, Then Green Once
Device Start-Up

Blinking Red And Green Alternately
Restoring to Factory Defaults

Blinking Red Once
Stop Watering

Blinking Green Once
Start Watering

Quick Blinking Green
Control-D2D Pairing in Progress

Quick Blinking Red
Control-D2D Unpairing in Progress

Slow Blinking Green
Updating

Fast Blinking Red 5 Times when pressing the SET Button
Low Battery, Replace Batteries Soon

E Install the App

If you are new to YoLink, please install the app on your phone or tablet, if you have not already. Otherwise, please proceed to the next section.

Scan the appropriate QR code below or find the "YoLink app" on the appropriate app store.

Download on the App Store

Apple phone/tablet
iOS 9.0 or higher

Available on Google Play

Android phone/tablet
6.0 or higher

Open the app and tap **Sign up for an account**. You will be required to provide a username and a password. Follow the instructions, to set up a new account. Allow notifications, when prompted.

You will immediately receive a welcome email from no-reply@yosmart.com with some helpful information. Please mark the yosmart.com domain as safe, to ensure you receive important messages in the future.

Log in to the app using your new username and password.

The app opens to the **Favorite** screen. This is where your favorite devices and scenes will be shown. You can organize your devices by room, in the **Rooms** screen, later.

F Add Your Smart Sprinkler Timer to the App

1. Tap **Add Device** (if shown) or tap the scanner icon:

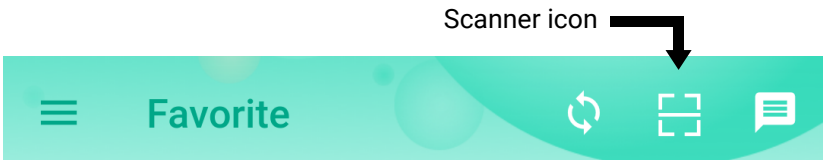

2. Approve access to your phone's camera, if requested. A viewfinder will be shown on the app.

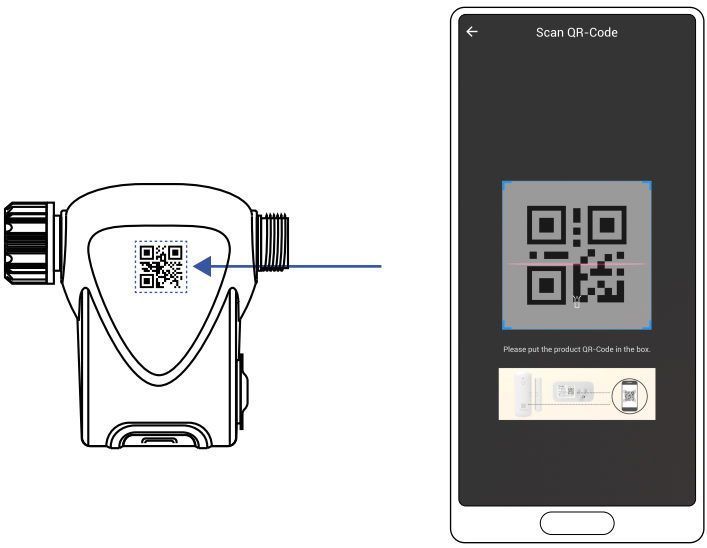

3. Hold the phone over the QR code so that the code appears in the viewfinder. If successful, the **Add Device** screen will be displayed.

F Add Your Smart Sprinkler Timer to the App, Continued

4. You can change the device name and assign it to a room later. Tap **Bind device**.

5. If successful, the screen will appear as shown. Tap **Done**.

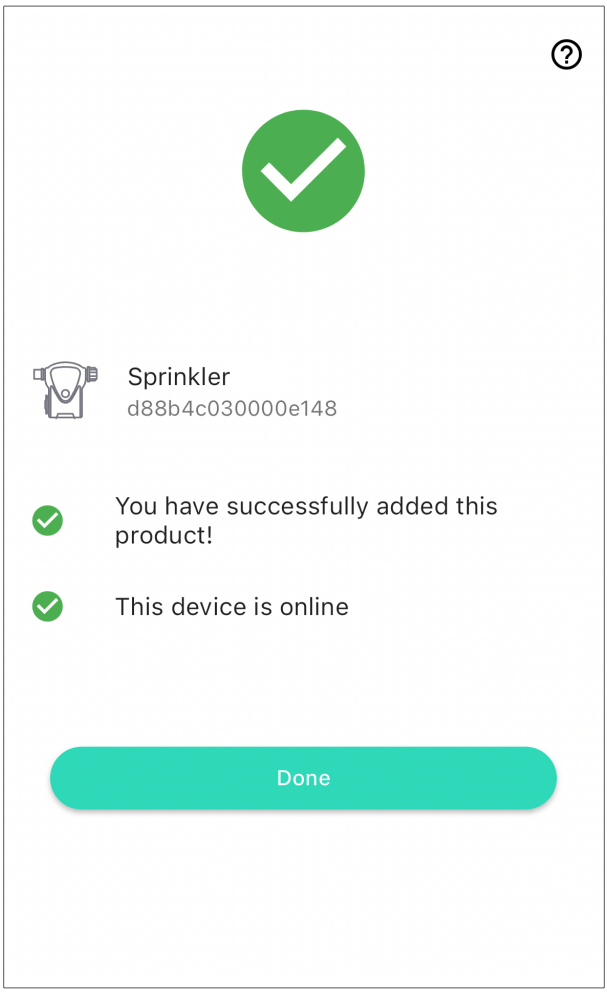

G Installation and Power Up

1. Before Installation

The two connectors supplied with the timer are already compatible with most garden taps and hoses in North America. If your plumbing setup is different, please purchase the appropriate connectors before you begin.

For your convenience, we recommend removing the battery tray before installation by following the steps in the Battery Replacement section. **Pull out the insulating tab**, reinstall the battery tray, and then secure it with the included screws.

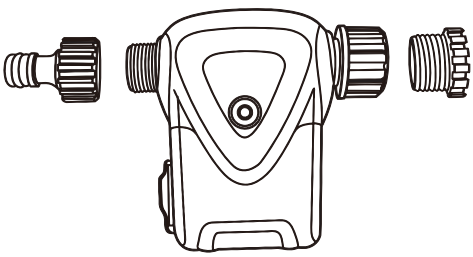

2. Installation Steps

① Assemble the timer and connectors exactly as shown in the diagram.

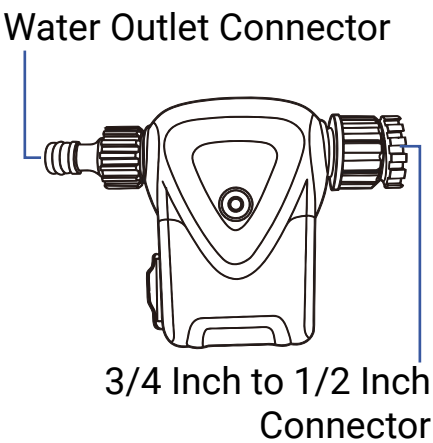

G Installation and Power Up, Continued

② Shut off the water supply and screw the assembled timer onto the faucet. Hand-tighten until the washer seats firmly.

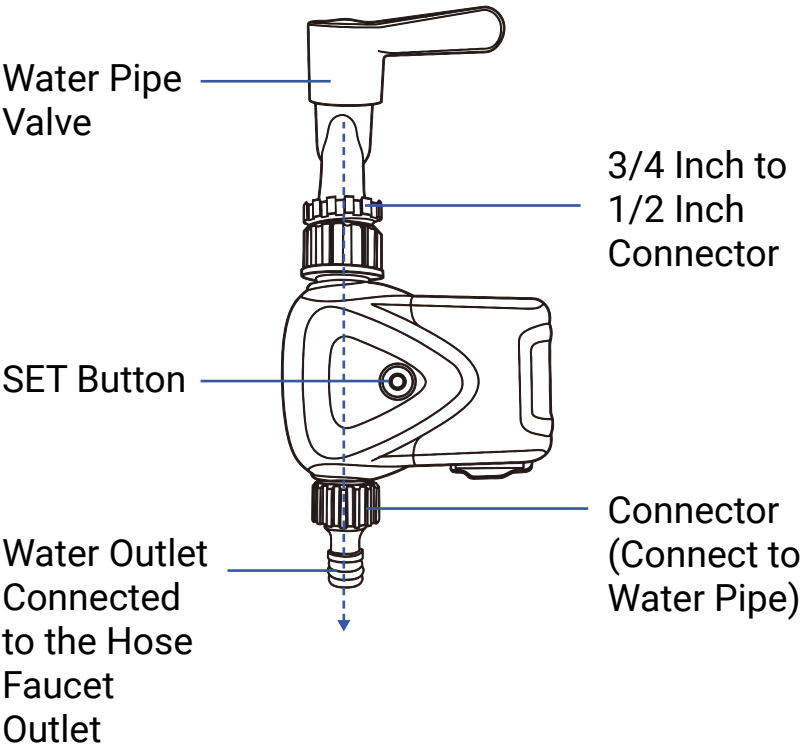

③ Turn the water back on, press the SET button to power up the timer, and—once it appears online—use the app to set your desired watering parameters.

G Installation and Power Up, Continued

3. Battery Replacement

① Insert four (4) AA alkaline batteries and align each “ + ” end with the “ + ” mark inside the tray.

② When sliding the tray back in, keep the spring contacts on the same side as the SET button / Status LED; this ensures correct orientation and reliable contact.

(1) Remove the screw

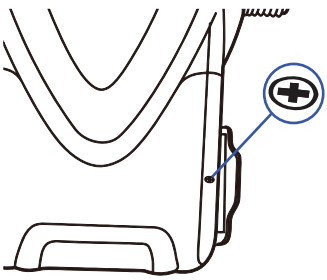

(2) Slide out the battery tray

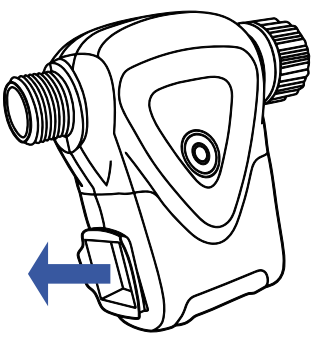

G Installation and Power Up, Continued

(3) Replace 4xAA battery, slide the tray back in, re-install and tighten the screw

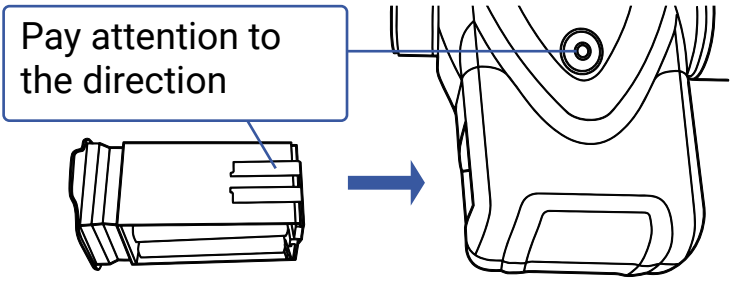

(1) Pay attention to the direction of the water inlet/outlet during installation and do not reverse it.

(2) Keep the product away from fire and heat sources. Do not expose products containing batteries to excessive heat (e.g., from storage in direct sunlight, fire.

(3) Do not place magnetic materials near the equipment.

H App Functions: Device Screen

In the app, tap on your Smart Sprinkler Timer icon. Your Smart Sprinkler Timer main screen should be similar to the one shown below.

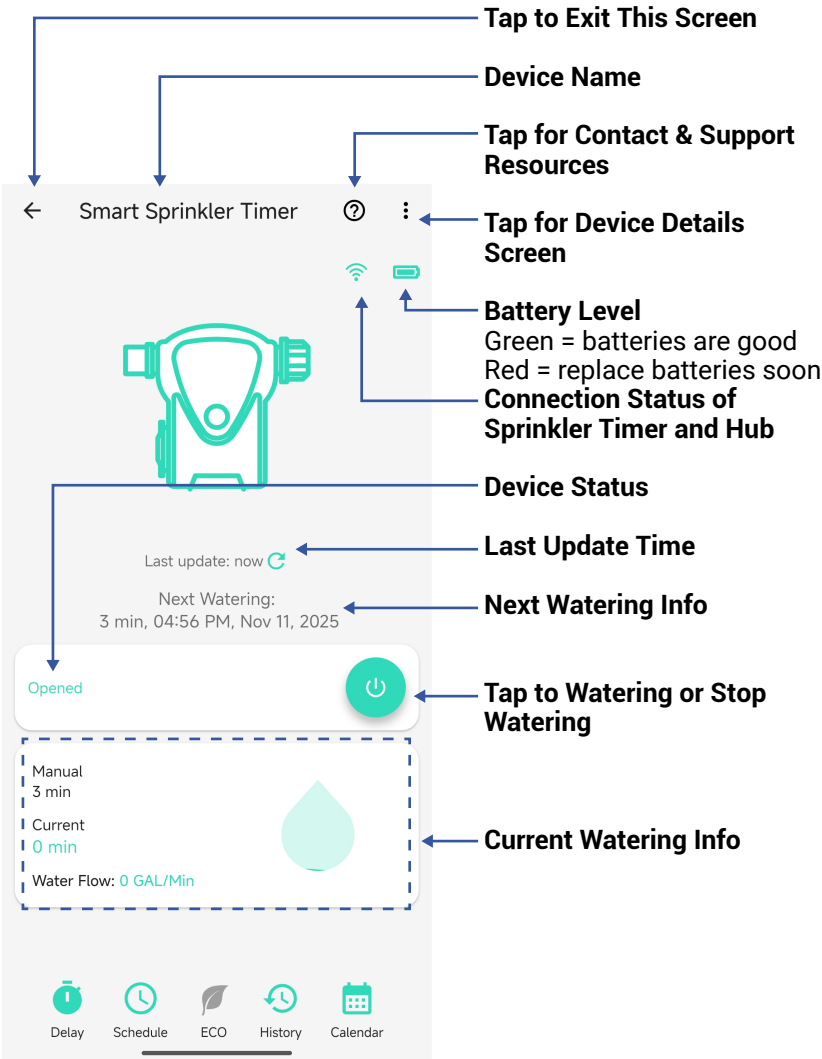

H App Functions: Device Screen, Continued

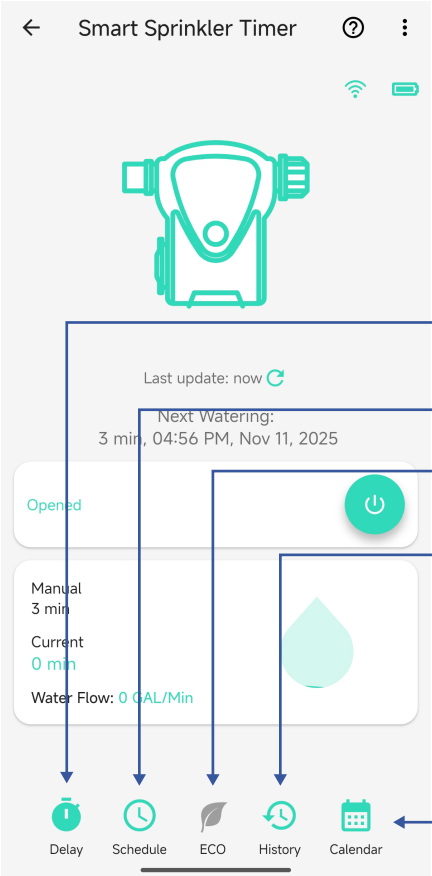

Delay Watering (Run Only Once)

Watering Schedule

Tap to view the device history logs

ECO (Energy Conservation Operation)
Delay watering automatically if it rains during the day with a scheduled watering time(s). (The local weather is checked once an hour).

Tap to view the watering calender

App Functions: Device Details Screen

Tap the three dots (in the upper right corner) to open the Smart Sprinkler Timer **Details** screen. Your Smart Sprinkler Timer screen should be similar to the one shown below.

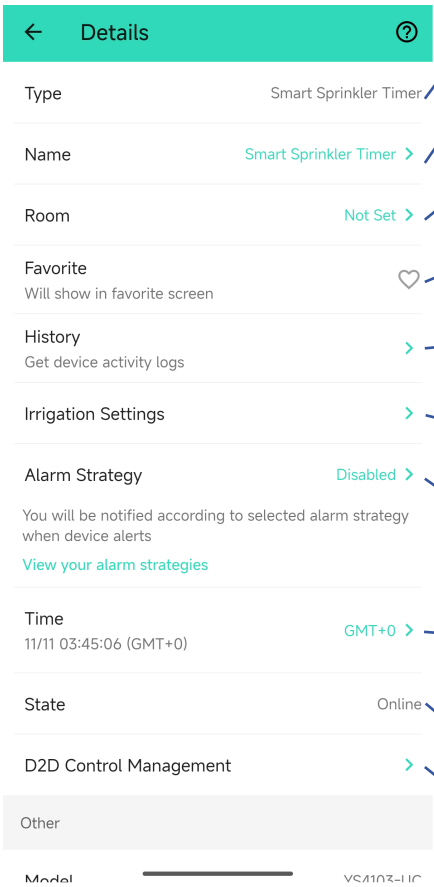

Device Type

Device Name
(Tap to Edit)

Room
(Tap to Edit)

Favorite
(Red if Favorite, Tap to Edit)

History
Tap to view device history

Tap to set the manual watering mode

Alarm Strategy
Tap to edit the sensor's Alarm Strategy

Time
Tap to sync with your home's time zone setting

State

Tap to manage D2D control of the deivce

App Functions: Device Details Screen, Continued

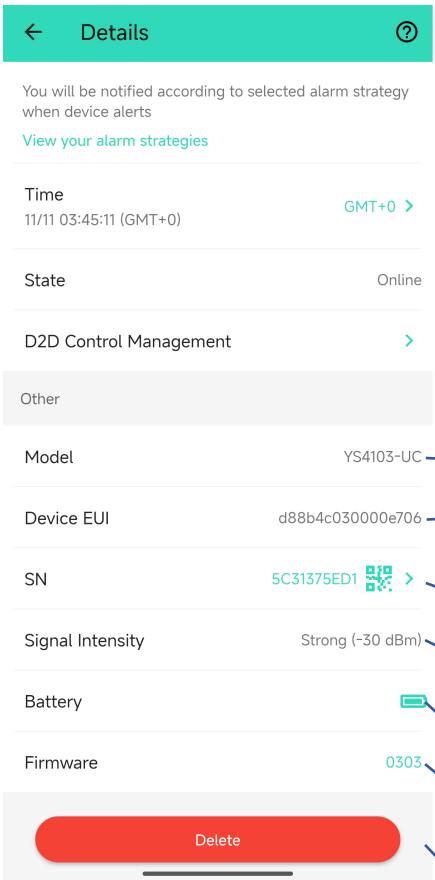

Model Number

Device EUI
Unique Identifier Number

Device Serial Number

Signal Intensity
(From YoLink Hub)

Battery

Firmware Revision
(Refer to page 26)

Remove Device from Current Account
Tap to delete the device from your YoLink account

J App Functions: Schedule

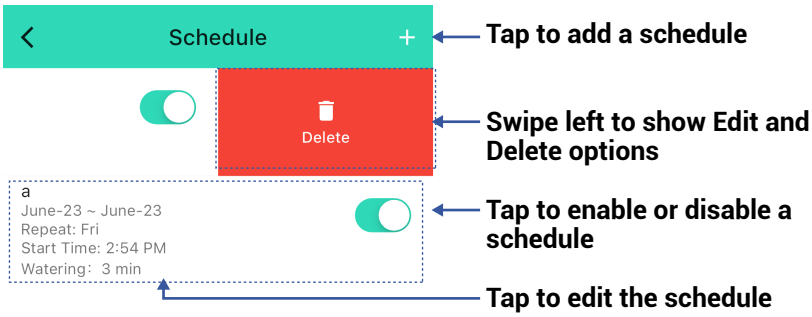

You can have a maximum 12 schedules at one time.

The schedule runs on the device (no internet connection required).

K App Functions: Schedule, Continued

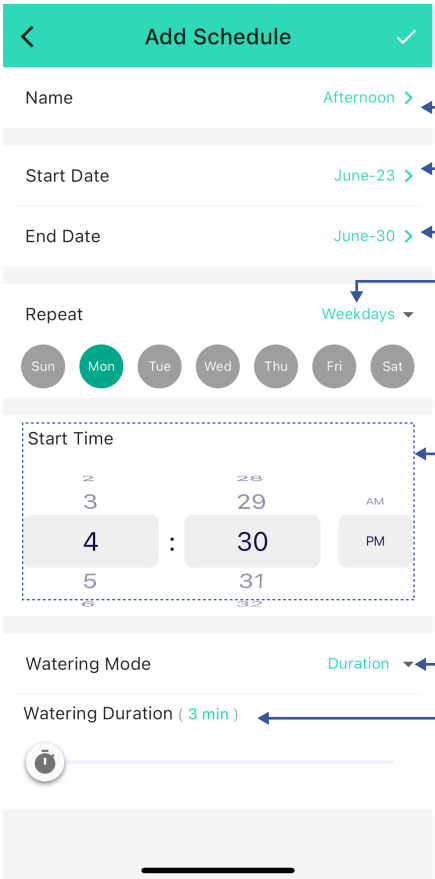

Tap to edit schedule name

Tap to select start date

Tap to select end date

Tap to select repeat days

Tap to select start time

Tap to select watering mode

Tap to select watering duration or watering volume

L App Functions: Alarm Strategy Screen

You can set up notifications in Alarm Strategy settings, make sure you have enabled App, Email, SMS notification from the app->Menu->Settings->Account Settings->Advanced Settings, and verified your email address and added your phone number in the app.

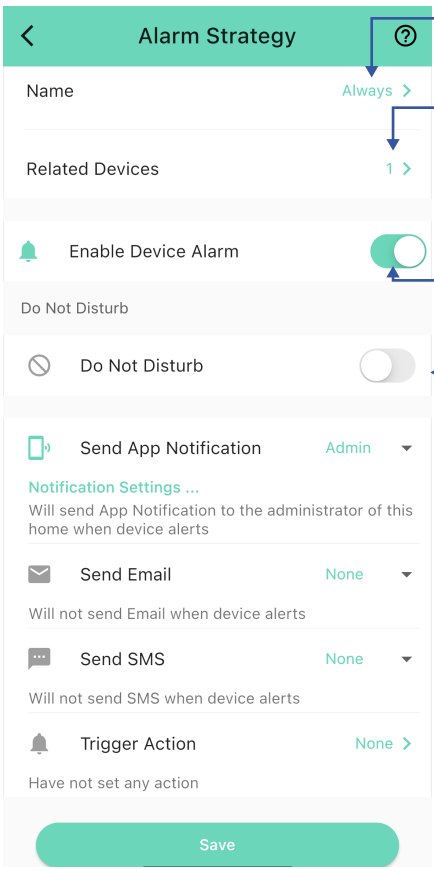

Strategy Name
Tap to edit the name

Related Devices
Tap to add more devices (that can alert) to this strategy, a device can be related to only one strategy

Tap to Enable or Disable The Strategy

Tap to Set Up Dnd (Do Not Disturb)

L App Functions: Alarm Strategy Screen, Continued

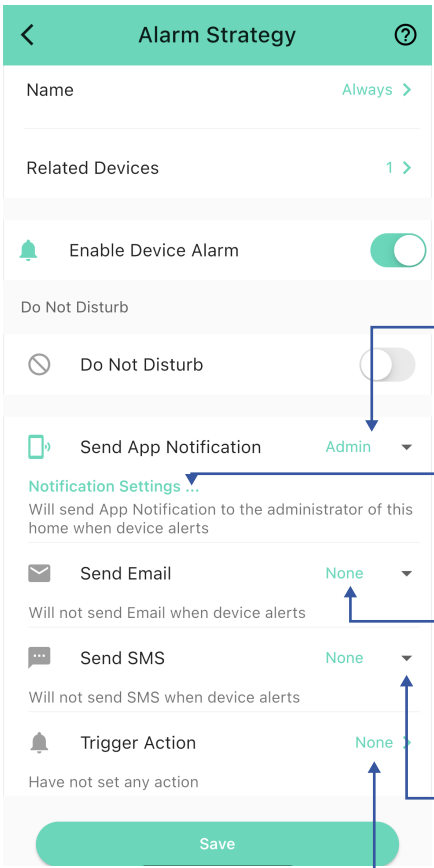

Send App Notification
Tap to select Admin to enable App push, select All, if desired for all members

Notification Settings (iOS only)
Tap to change notification tone, if desired

Send Email
Tap to select Admin to enable email notification, select All, if desired to send to all members

Send SMS
Tap to select Admin to enable limited text messages, select All (subscribe required-starter or standard plan), if desired to send to all members

Trigger Action
Tap to choose trigger actions (YoLink sirens, YoLink SpeakerHubs, scene)

App Functions: Automation

The Smart Sprinkler Timer can be set up as an action in an automation. For example, you can automatically start waterng f the solar moisture sensor detects a low humidity. This example is shown below.

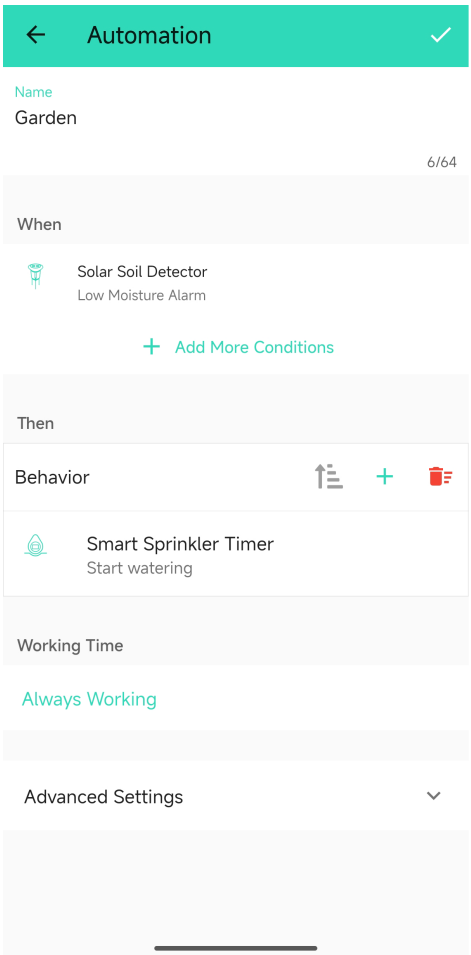

N Control D2D

YoLink Control-D2D is our unique device-to-device control technology. Using Control-D2D, compatible YoLink devices can control or be controlled by other YoLink devices, without a hub or internet connection. One device can control another device, directly.

A device that controls or sends out commands is called the **controller**. A device that is controlled or receives the commands is called the **responder**. An example of a controller are a On/Off Fob while examples of a responder are a Smart Sprinkler Timer.

Use of YoLink Control-D2D is optional.

One device can be Control-D2D-paired to up to 128 other devices.

Pairing is separate from the app and any automation, scenes or alarm strategies you may have configured in the app. Use care to not create automations that conflict with Control-D2D-pairing and vice-versa.

During pairing, the controlled device must be in the state (open, on, unlocked, etc.) that it should transfer to when signalled by the controller.

Pairing

1. On the On/OffFob, to pair one or more devices to the top ON & OFF buttons, press and hold the top ON button for 5 to 10 seconds, until the LED flashes green, then release the button.

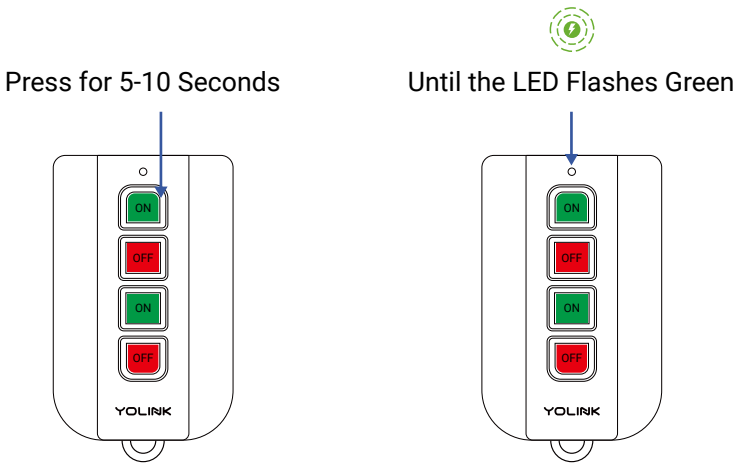

2. To configure the Smart Sprinkler Timer as a responder, press and hold the timer's SET button for 5-10 seconds until the LED quickly blinks green, then release the button.

Upon pairing, the LED will stop blinking. This may happen after only blinking two or three times.

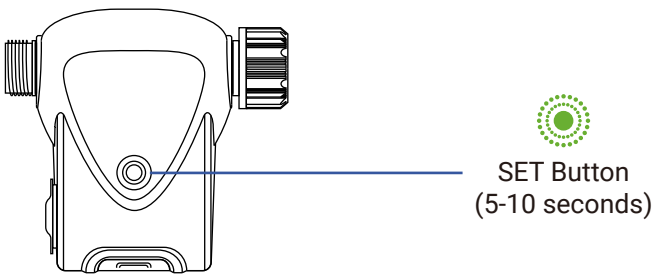

Testing

Test the On/OffFob. Start with your paired timer off. Press the associated ON button on the On/OffFob, and verify the paired timer turned on. Press the associated OFF button on the On/OffFob, and verify the paired timer turned off.

Unpairing

1. On the On/OffFob, press the applicable ON button for 10 to 15 seconds, until the LED flashes green, then red, then release the button.

2. On the Timer, press and hold the SET button for 10 to 15 seconds, until the status LED flashes green, then red.

The Timer should no longer respond to the On/OffFob. Test the fob, and perform the unpairing steps again, if needed.

0 Factory Reset

Factory reset will erase device settings and restore it to factory default settings. Doing a factory reset will not remove the device from your account and it will not harm the device, or lose any data or require you to redo your automations, etc.

Instructions:

Hold the SET button down for 20-30 seconds, until the LED blinks red and green alternately. Then, release the button. (Holding the button down longer than 30 seconds will abort the factory reset operation)

Factory reset will be complete when the LED stops blinking.

Only deleting a device from the app will remove it from your account. Factory reset will not delete the device from the app.

Firmware Update

Your YoLink products are constantly being improved, with new features added. It is periodically necessary to make changes to your device's firmware. For optimal performance of your system, and to give you access to all available features for your devices, these firmware updates should be installed when they become available.

In the Detail screen of each device, at the bottom, you will see the Firmware section, as shown in the image below. A firmware update is available for your device if it says "#### ready now"

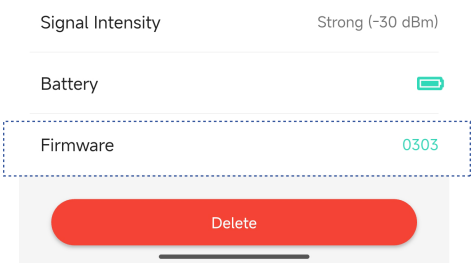

Tap in this area to start the update.

The device will update automatically, indicating progress by percentage-complete. You may use your device during the update, as the update is performed "in the background". The LED will slowly blink green during the update, and the update may continue for several minutes beyond the LED turning off.

Q Specifications

Voltage:	Alkaline battery 1.5V AA*4 (6V)
Device Current Draw:	≤ 300mA(operating) ≤ 90uA(standby)
Working Temperature:	1°C ~ 50°C (33.8°F ~ 122°F)
Working Humidity:	≤ 95%RH (non-condensing)
Valve Size:	3/4 pipe Working Water
Pressure:	≤ 1MPa
Waterproof level:	IP66

Specifications, Continued

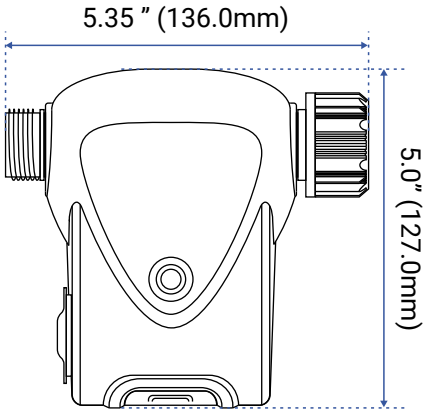

FRONT

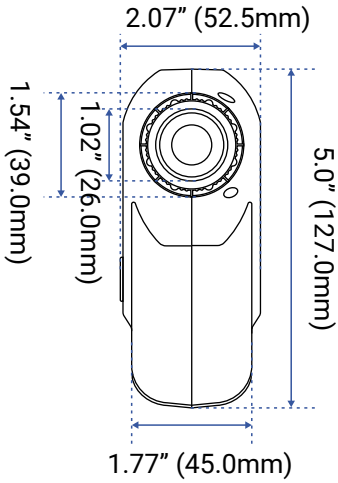

SIDE

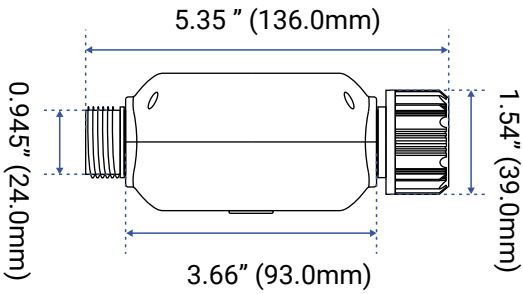

TOP

R Warnings

- Please install, operate and maintain the Smart Sprinkler Timer only as outlined in this manual. Improper installation or use may damage the unit and/or void the warranty.

- Do not install or use the device outside of the temperature and humidity range listed in the environmental specifications.

- For the maximum life of the device, provide overhead cover or a protective enclosure. This can protect it from the damaging effects of intense direct sunlight and/or rain over a period of years.

- Do not immerse or allow the devices to be immersed or submerged in water.

- Avoid placing the devices in extremely dirty or dusty environments.

- If the device does get dirty, please clean it by wiping it down with a clean dry cloth. Do not use strong chemicals or detergents, which may damage or discolor the exterior and/or damage the electronics, voiding the warranty.

- Do not install the device where it may be subjected to vandalism, abuse, physical impacts or strong vibrations. Physical damage is not covered by the warranty.

R Warnings, Continued

- Power the device only with new AA alkaline batteries. Do not use rechargeable batteries, do not use other type batteries (e.g. zinc blend). Do not mix old and new batteries.

- If storing the device for extended periods, remove the batteries.

- Please contact Customer Support before attempting to repair, disassemble or modify the device, any of which can permanently damage the device and void the warranty.

Warranty

2 Year Limited Electrical Warranty

YoSmart Inc. warrants to the original user (“customer”) of this product that it will be free from defects in materials and workmanship, under normal use, for 2 years from the date of purchase. This warranty does not apply to devices that have been improperly installed, modified, put to a use other than designed, or subjected to acts of God (such as floods, lightning, earthquakes, etc.). This warranty does not cover neglected or abused products. This warranty is limited to the repair or replacement of the device, only, at YoSmart's sole discretion. YoSmart will NOT be liable for the cost of installing, removing, nor reinstalling this product, nor direct, indirect, or consequential damages to persons or property resultng from the use of this product. This warranty only covers the cost of replacement parts or replacement units, it does not cover shipping & handling fees. The customer must provide proof of purchase, in the form of the original purchase invoice or order number. The purchase must have been made from an authorized seller.

To implement this warranty please contact us by one of the methods listed on the Contact Us page of this user guide.

FCC Statement

This device complies with part 15 of the FCC Rules. Operation is subject to the following two conditions: (1) This device may not cause harmful interference, and (2) this device must accept any interference received, including interference that may cause undesired operation. Any Changes or modifications not expressly approved by the party responsible for compliance could void the user's authority to operate the equipment.

Note: This equipment has been tested and found to comply with the limits for a Class B digital device, pursuant to part 15 of the FCC Rules. These limits are designed to provide reasonable protection against harmful interference in a residential installation. This equipment generates uses and can radiate radio frequency energy and, if not installed and used in accordance with the instructions, may cause harmful interference to radio communications. However, there is no guarantee that interference will not occur in a particular installation. If this equipment does cause harmful interference to radio or television reception, which can be determined by turning the equipment off and on, the user is encouraged to try to correct the interference by one or more of the following measures:

- Reorient or relocate the receiving antenna.
- Increase the separation between the equipment and receiver.
- Connect the equipment into an outlet on a circuit different from that to which the receiver is connected.

FCC Statement, Continued

- Consult the dealer or an experienced radio/TV technician for help.

The device has been evaluated to meet general RF exposure requirement. The device can be used in portable exposure condition without restriction.

PRODUCT NAME:
SMART SPRINKLER TIMER

PARTY:
YOSMART, INC.

TELEPHONE:
831-292-4831

MODEL NUMBER:
YS4103-UC

ADDRESS:
25172 ARCTIC OCEAN DRIVE, SUITE 106
LAKE FOREST, CA 92630 USA

EMAIL:
SERVICE@YOSMART.COM

Contact Us

We are here for you, if you ever need any assistance installing, setting up or using a YoLink app or product!

Need help? For fastest service, please email us 24/7 at **service@yosmart.com**

Or call us at **831-292-4831** (US phone support hours: **Monday - Friday, 9AM to 5PM** Pacific)

You can also find additional support and ways to contact us at:
www.yosmart.com/support-and-service

Or scan the QR code:

Support Home Page

Finally, if you have any feedback or suggestions for us, please email us at
feedback@yosmart.com

Thank you for trusting YoLink!

YoLink Customer Support

YOLINK

25172 Arctic Ocean Drive, Suite 106 Lake Forest, CA 92630
© 2026 YOSMART INC. CALIFORNIA, USA