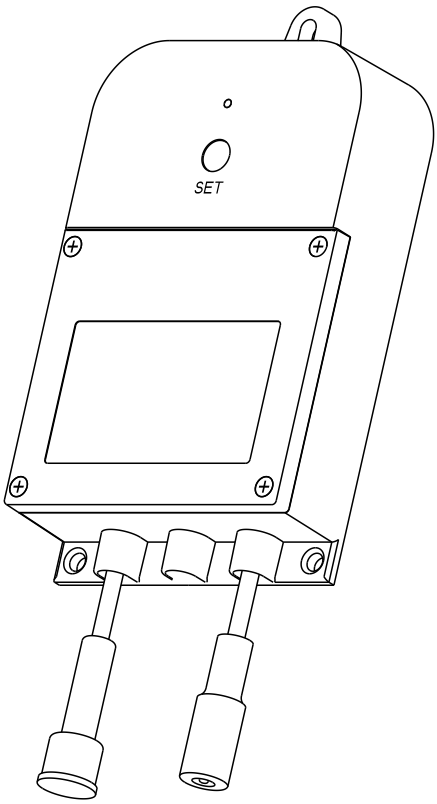

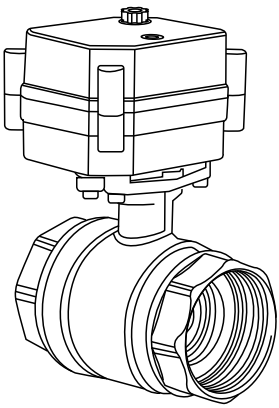

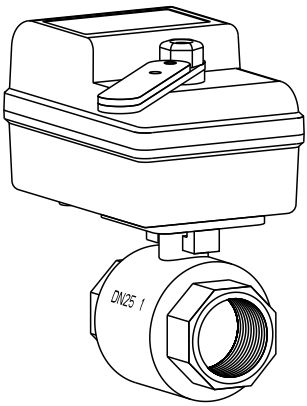

Valve Controller 2 & Motorized Valve/ EVO Motorized Valve

YS5003(S)-UC

KITS:

DN-15/20/25

YS5004-15/20/25

Installation & User Guide

Revision Jun. 11, 2026

TABLE OF CONTENTS

A . Welcome! 01
B . Before You Begin 02
C . In the Box 03
D . Required Items 05
E . Get to Know Your Valve Controller 2 07
F . Power Up 08
G . Install the App 09
H . Add Your Valve Controller 2 to the App 10
I . Install the Valve Controller 2 12
J . Get to Know Your Motorized Valve 15
K . Get to Know Your EVO Motorized Valve 16
L . Install the Bulldog Valve Robot 17
M . Final Connections 21
N . Manual Operation 22
O . Testing 23

P . App Functions: Device Screen 24
Q . App Functions: Device Details Screen 25
R . App Functions: Schedule 26
S . App Functions: Timer 27
T . App Functions: Alarm Strategy Screen 28
U . App Functions: Automation 30
V . Troubleshooting 31
W . Control-D2D 32
X . Factory Reset 35
Y . Firmware Update 36
Z . Specifications 37
AA. Battery Replacement 41
AB. Warnings 43
AC. Warranty 45
AD. FCC Statement 46
AE. IC Statement 48
AF. Contact Us 49

A Welcome!

Thank you for purchasing YoLink products! We appreciate you trusting YoLink for your smart home & automation needs. Your 100% satisfaction is our goal. If you experience any problems with your installation, with our products or if you have any questions that this manual does not answer, please contact us right away. See the Contact Us section for more info.

Thank you!

YoLink Customer Support

User Guide Conventions

The following icons are used in this guide to convey specific types of information:

⚠️ Very important information (can save you time!)

🤔 Good to know info but may not apply to you

B Before You Begin

Visit our Valve Controller 2 support page on our website, for the latest installation guides, additional resources, information and videos by visiting:

https://www.yosmart.com/support/YS5003-UC

Or by scanning the QR code:

Download the most current version of the user guide by scanning the QR code:

Your Valve Controller 2 wirelessly connects to the internet via a YoLink Hub, and it does not directly connect to your WiFi or local network. In order for remote access to the device. from the app, and for full-functionality, a YoLink hub is required. This guide assumes the YoLink app has been installed on your phone, and a YoLink Hub or SpeakerHub is installed and online.

C In the Box

YS5003(S) Items:

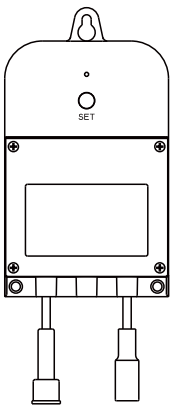

Valve Controller 2

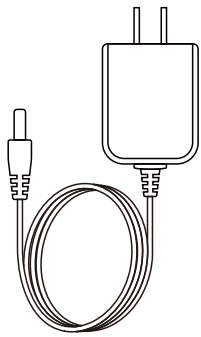

Plug-in Power Supply

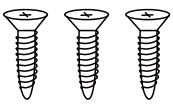

Phillips Head Screws(3)

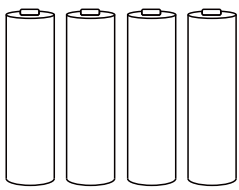

4 x AA Batteries (Pre-Installed)

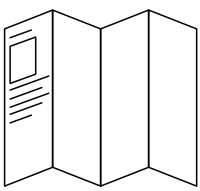

Quick Start Guide

C In the Box, Continued

Motorized Valve Kit Items:

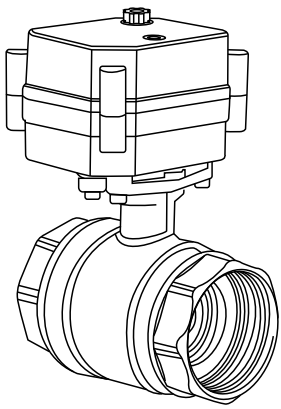

Motorized Valve

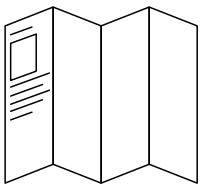

Quick Start Guide

EVO Motorized Valve Kit Items:

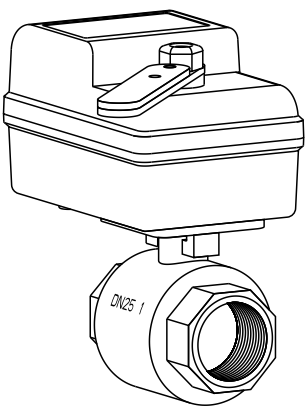

EVO Motorized Valve

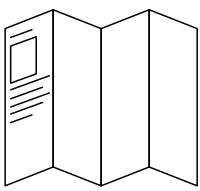

Quick Start Guide

D Required Items

These tools or items may be required:

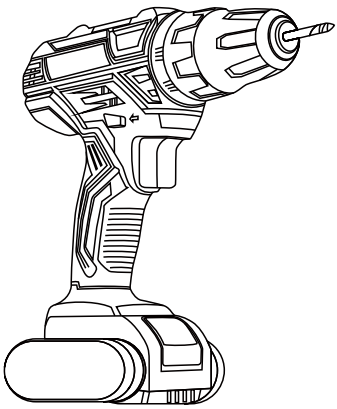

Drill with Drill Bits

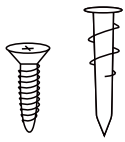

Wall Anchors

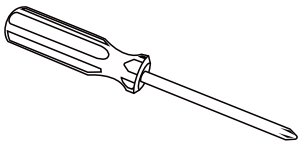

Medium Phillips Screwdriver

These items will be required to install the Bulldog Valve Robot:

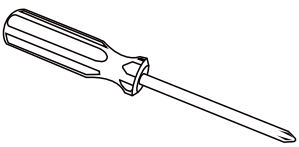

Medium Phillips Screwdriver

D Required Items, Continued

These items may be required to install the motorized valve:

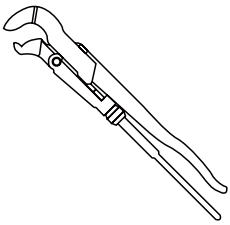

Pipe Wrench

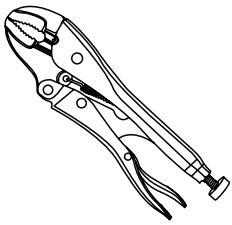

Locking Pliers

Copper Pipe Cutting Tool

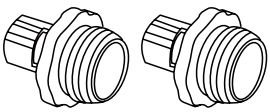

Pipe Fittings/Adapters

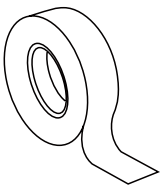

Thread Seal Tape

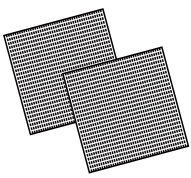

Sandpaper

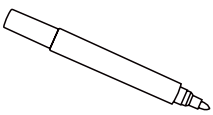

Marker or Pencil

E Get to Know Your Valve Controller 2

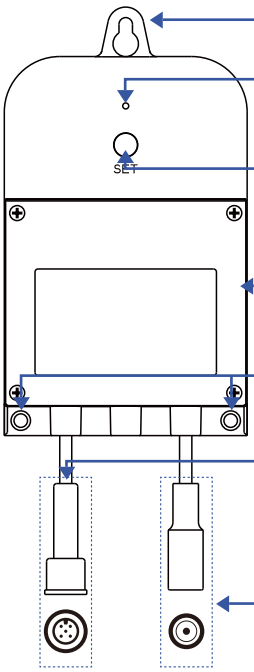

LED Behaviors

Blinking Red Once, Then Green Once
Device Start-Up

Blinking Red And Green Alternately
Restoring to Factory Defaults

Blinking Red Once
Valve Closing

Quick Blinking Red Twice
Valve is Closed (YS5003S, Only)

Blinking Green Once
Valve Opening

Quick Blinking Green Twice
Valve is Open (YS5003S, Only)

Slow Blinking Green Twice
Connecting to Hub

Quick Blinking Green
Control-D2D Pairing in Progress

Quick Blinking Red
Control-D2D Unpairing in Progress

Slow Blinking Green
Updating

Fast Blinking Red Every 30 Seconds or Fast Blinking Red 5 Times when pressing the SET Button
Batteries are Low, Please Replace the Batteries

Green LED on Steady
9VDC Power Input Connected

F Power Up

Power up the Valve Controller 2 by briefly pressing the SET button, until the LED flashes (red, then green).

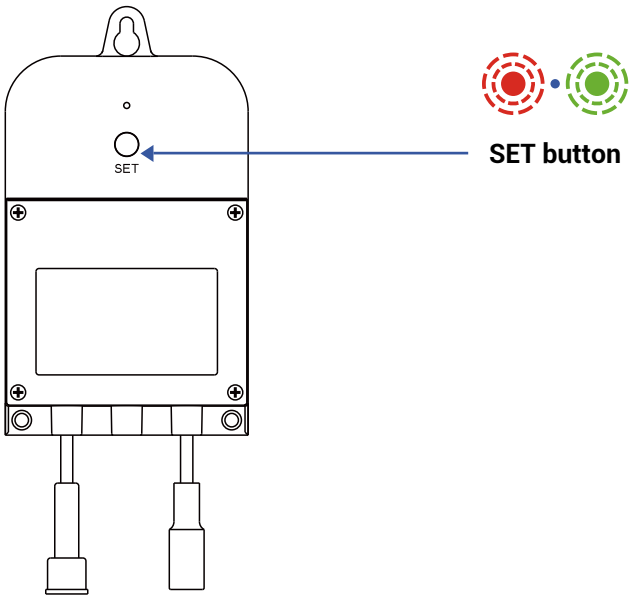

G Install the App

If you are new to YoLink, please install the app on your phone or tablet, if you have not already. Otherwise, please proceed to the next section.

Scan the appropriate QR code below or find the “YoLink app” on the appropriate app store.

Download on the App Store

Apple phone/tablet
iOS 9.0 or higher

Available on Google Play

Android phone/tablet
6.0 or higher

Open the app and tap **Sign up for an account**. You will be required to provide a username and a password. Follow the instructions, to set up a new account. Allow notifications, when prompted.

You will immediately receive a welcome email from no-reply@yosmart.com with some helpful information. Please mark the yosmart.com domain as safe, to ensure you receive important messages in the future.

Log in to the app using your new username and password.

The app opens to the **Favorite** screen. This is where your favorite devices and scenes will be shown. You can organize your devices by room, in the **Rooms** screen, later.

H Add Your Valve Controller 2 to the App

1. Tap **Add Device** (if shown) or tap the scanner icon:

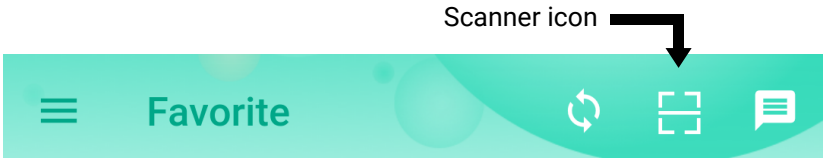

2. Approve access to your phone's camera, if requested. A viewfinder will be shown on the app.

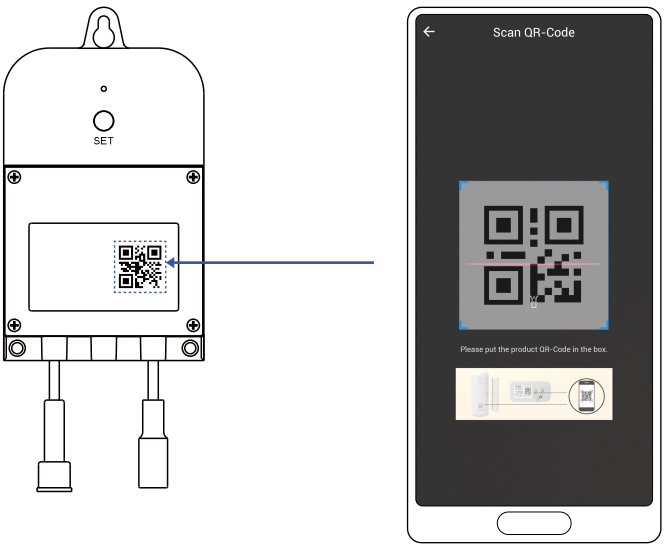

3. Hold the phone over the QR code so that the code appears in the viewfinder. If successful, the **Add Device** screen will be displayed.

H Add Your Valve Controller 2 to the App, Continued

4. You can change the device name and assign it to a room later. Tap **Bind device**.

5. If successful, the screen will appear as shown. Tap **Done**.

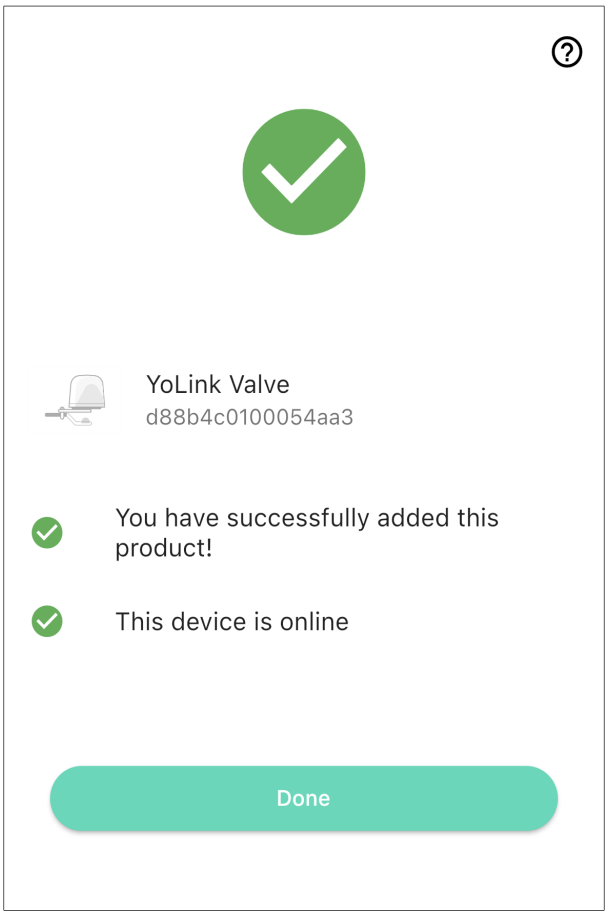

I Install the Valve Controller 2

Preparing for installation:

Determine where you will mount the valve controller. The Valve Controller 2 was designed to be wall-mounted, at an indoor or outdoor location.

If installing your Valve Controller 2 and/or valve device at an outdoor location, please first refer to the environmental range specifications, found on the Valve Controller 2 product support page of our website. Also, while the Valve Controller 2, the Bulldog Valve Controller and our motorized valves are rated for outdoor use, to ensure years of dependable operation, provide protection from rain and direct sunlight with overhead cover, in the form of an enclosure or rain hood.
Do not install your valve controller or valve device at a location where it will be submerged in water.

Use of the 9VDC power supply/adapter is optional. If you do not use the power supply/adapter (or provide your own 9VDC power supply), the valve controller must have batteries installed. If you do connect a 9VDC power supply to your valve controller, the use of batteries is optional.

I Install the Valve Controller 2, Continued

With the use of optional extension cables, the valve controller can be installed remotely from the Bulldog or motorized valve. In some cases this may allow placing the controller at a more convenient or more accessible location (for battery replacement, etc.). The location of the valve controller must be within the limits of the cables. If in doubt, connect all applicable cables between the controller and the valve device and the AC power outlet (if applicable) and choose an appropriate location for the controller. (Extension cables can be purchased on our website.)

Determine how you will mount the valve controller to the wall, and ensure you have the appropriate mounting hardware (screws, anchors, etc.) for the wall surface.

Install the Valve Controller 2:

1. Holding the valve controller at the desired location, and using a marker or pencil, transfer the valve controller's top mounting hole location to the wall surface.

2. If using wall anchors, install one at the top mounting hole location, per the manufacturer's instructions (drill a pilot hole first, etc.)

Install the Valve Controller 2, Continued

3. Insert a screw in the top mounting hole location, but do not screw it flush with the wall; leave space on the end of the screw for the valve controller.

4. Hang the valve controller on this screw, and it should be level on the wall. Optionally, you can verify the valve controller is level with a level tool at this time. Using a marker or pencil, transfer the valve controller's two bottom mounting holes to the wall surface.

5. If using wall anchors, install them at this time.

6. Insert screws in each of the two bottom mounting hole locations.

7. Tighten all three screws, and confirm the valve controller is secured to the wall surface.

J Get to Know Your Motorized Valve

The valve included in this kit is a 9V DC non-smart motorized valve. Use only this valve or YoLink-approved valve control products, such as the Bulldog Valve Robot. Do not use with non-YoLink valve products.

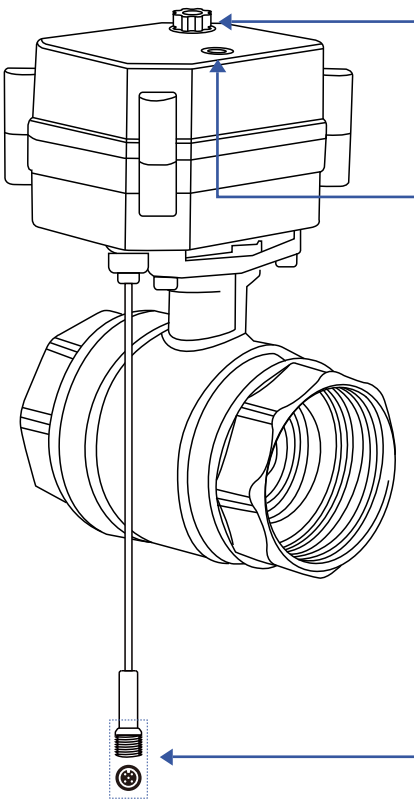

Manual Control Knob
Lift, then turn either clockwise to shut the valve or counterclockwise to open the valve

Valve Position Indicator
Window indicates the current position of the valve. "O" indicates open, "S" indicates shut

Valve Control/Status Cable

K Get to Know Your EVO Motorized Valve

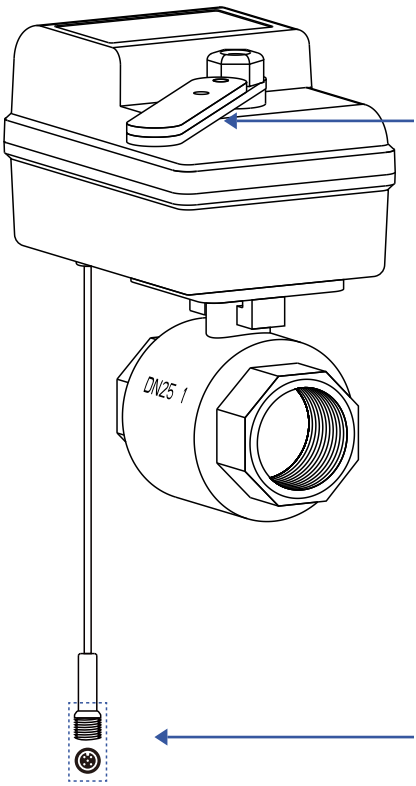

Manual Control Knob
Lift, then turn either clockwise to shut the valve or counterclockwise to open the valve

Valve Control/Status Cable

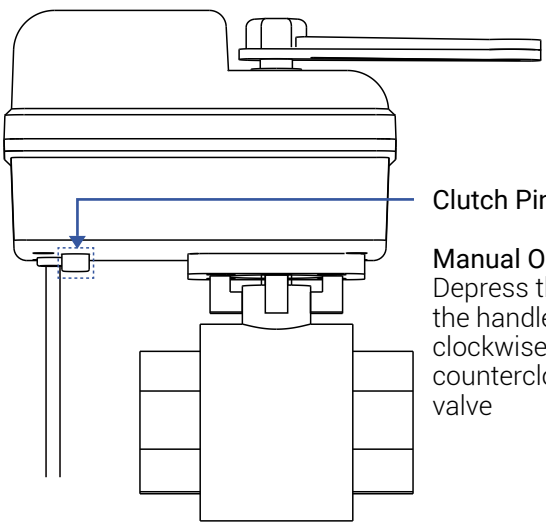

Clutch Pin

Manual Open/Shut the Valve
Depress the clutch pin, extend the handle, then turn either clockwise to shut the valve or counterclockwise to open the valve

L Install the Motorized Valve or EVO Motorized Valve

Preparing for installation:

Determine the installed location of your new motorized valve. Please consider these factors when choosing the location for the motorized valve:

- This location must be within reach of the cables of the Valve Controller 2 (see Install the Valve Controller 2 section, on page 12.
- Ensure that there is physical room for the valve, that other pipes, a wall or other objects will prevent installing it at the desired location.
- The manual control knob and Open/Shut indicator window should be visible and accessible.
- Please note, the valve can be installed in any orientation; sideways, inverted, etc.
- Local plumbing or building codes may require a non-electronic means of water shut-off. If this is the case, or if in doubt on the requirements, install the motorized valve in line (before or after) the existing shut-off valve (ball valve, etc.)

L Install the Motorized Valve or EVO Motorized Valve, Continued

1. Shut-off the water serving the pipe where the valve is to be installed. Drain the water from the pipe, by turning on a faucet, or by other method as required.

2. Depending on the adapter fitting used, measure the length of pipe that must be cut, and mark the cut lines on the pipe, as shown below.

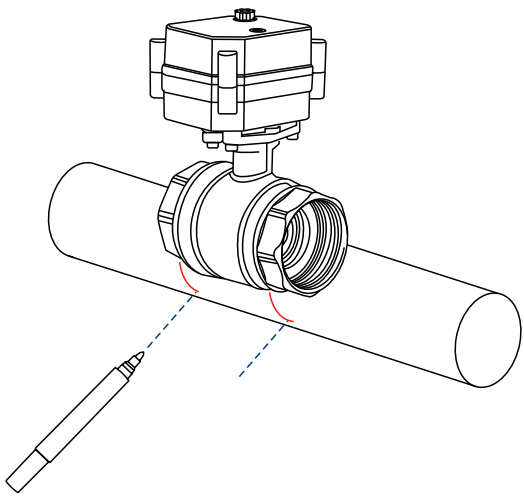

or

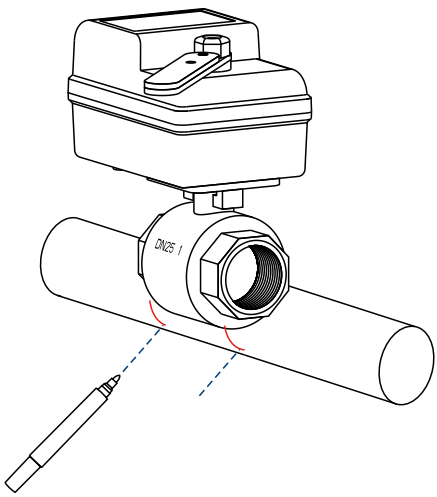

L Install the Motorized Valve or EVO Motorized Valve, Continued

3. Cut the water pipe through the mark using a pipe cutting tool, then remove the cut section of pipe, as shown below.

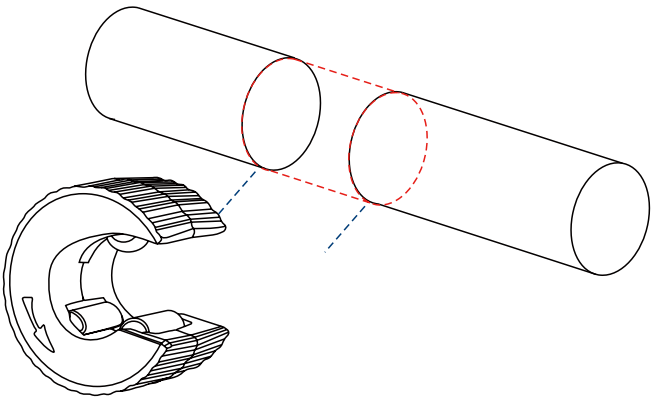

4. Sand both ends of cut pipe, removing any burrs or rough edges. Use care handling the cut edges, which may be sharp! Wipe off the cut section of pipe with a clean cloth.

5. Install your adapter fittings in the pipe ends, per the manufacturer instructions.

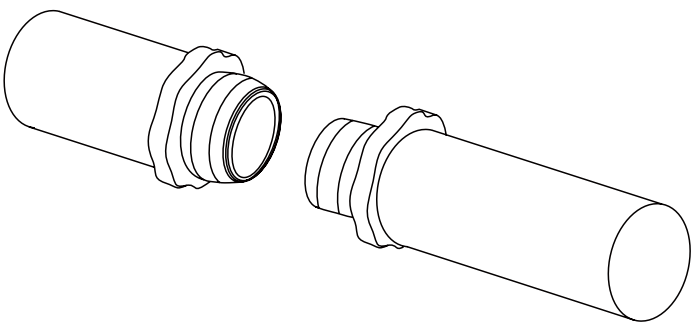

L Install the Motorized Valve or EVO Motorized Valve, Continued

6. Wrap each adapter's threaded end with thread seal tape, per the tape manufacturer's instructions, as shown below.

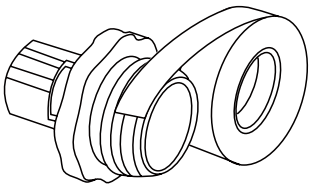

7. Install the Motorized Valve on the adapter fittings, ensuring a secure connection at each fitting, as shown below.

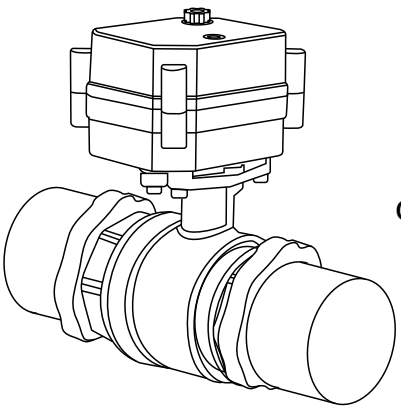

or

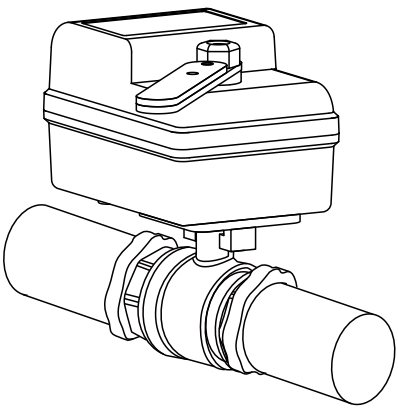

8. At the water valve or point of disconnection, turn the water on again.

9. Verify there are no leaks and no visible water on the motorized valve.

M Final Connections

1. Connect the valve controller's valve & status control cable to the control cable of the motorized valve. Ensure the arrow of the cable connector aligns with the arrow of the other cable connector. Twist the collar of the connector tight.

2. If using the 9VDC power input, via the included plug-in power adapter or via your own 9VDC power supply, prior to plugging-in the power supply/adapter or energizing the power supply circuit, connect the valve controller's 9VDC input cable to the power adapter or 9VDC power supply cable. Plug in the power supply/adapter or energize the 9VDC power supply circuit at this time. If you are electing to power the valve controller only from the 9VDC power input (not recommended), you can remove the batteries at this time.

N Manual Operation

It is recommended to always use the app or the valve controller's SET button to operate your motorized valve.

Lift the knob on the top of the motorized valve and turn it by hand, until it can not be turned. Check the valve position indicator.

For EVO motorized valve, depress the clutch pin, extend the handle, then turn either clockwise to shut the valve or counterclockwise to open the valve.

If you are not using the valve status feature or if your valve controller does not have the valve status feature, to avoid the app from indicating the wrong valve status, if you manually closed the valve, for example, manually open it again. Do not open it via the app, after manually closing it and vice versa, otherwise the app will incorrectly indicate the valve is closed.

O Testing

1. Test the Valve Controller 2 and motorized valve by pressing the SET button on the controller. Listen for a smooth even sound from the motorized valve. Once closed, ensure that no water is flowing through the valve (the water flowing through the valve may make an audible sound). Check that no water flows from an open faucet served by this valve.

2. Test the operation of the Valve Controller 2 from the app. From the **Rooms** or **Favorite** screen, locate your Valve Controller 2, tap the image, then tap **Close** to turn off the water, and tap **Open** to turn it on.

App Functions: Device Screen

In the app, tap on your Valve Controller 2 icon. Your Valve Controller 2 main screen should be similar to the one shown below.

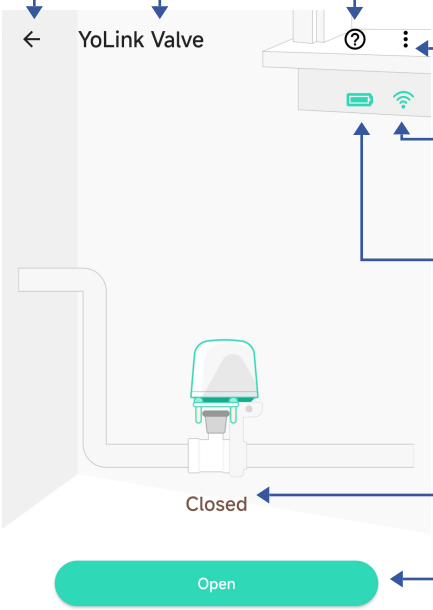

Tap to Exit This Screen

Device Name

Tap for Contact & Support Resources

Tap for Device Details Screen

Connection Status of Valve Controller and Hub

Battery Level
Green = batteries are good
Red = replace batteries soon

Valve Status

Tap to Open or Close Valve

Timer
Set the One-Time-Timer Duration for the Valve

Schedule
Create Open/Close Schedules to Automate Your Valve

App Functions: Device Details Screen

Tap the three dots (in the upper right corner) to open the Valve Controller 2 **Details** screen. Your Valve Controller 2 screen should be similar to the one shown below.

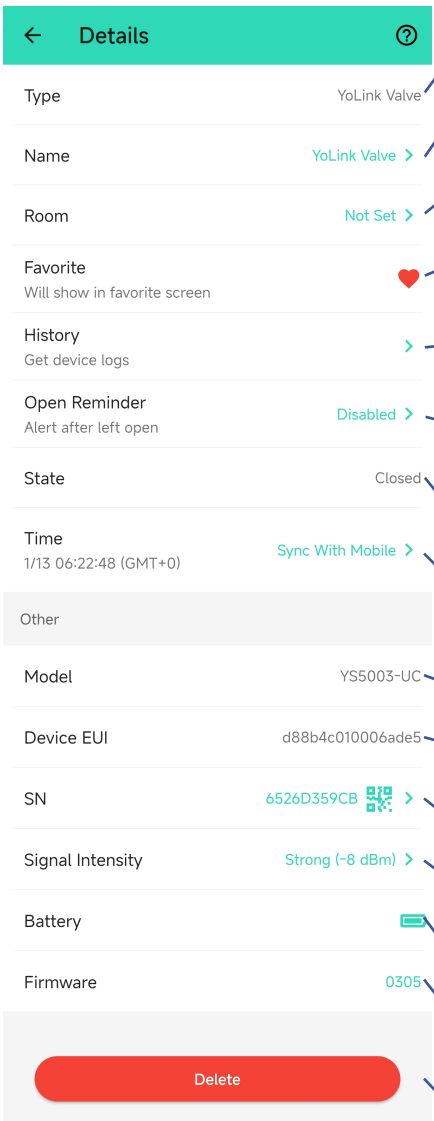

Device Type

Device Name
(Tap to Edit)

Room
(Tap to Edit)

Favorite
(Red if Favorite, Tap to Edit)

History
Tap to view device history

Open Reminder
Tap to Disable or Enable Open Reminder

State

Time
Tap to sync with mobile

Model Number

Device EUI
Unique Identifier Number

Device Serial Number

Signal Intensity
(From YoLink Hub)

Battery

Firmware Revision
(Refer to page 37)

Remove Device from Current Account
Tap to delete the device from your YoLink account

App Functions: Schedule

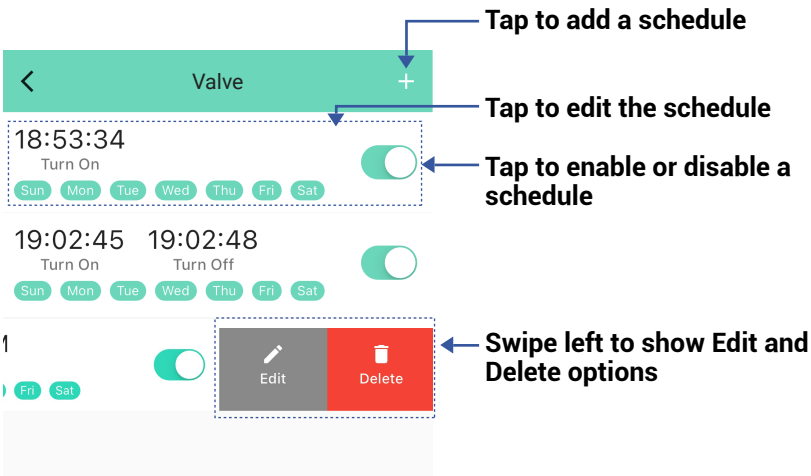

You can have a maximum 6 schedules at one time.

The schedule runs on the device (no internet connection required).

You can add more schedules in Automation settings. Automation settings are saved in the cloud.

App Functions: Timer

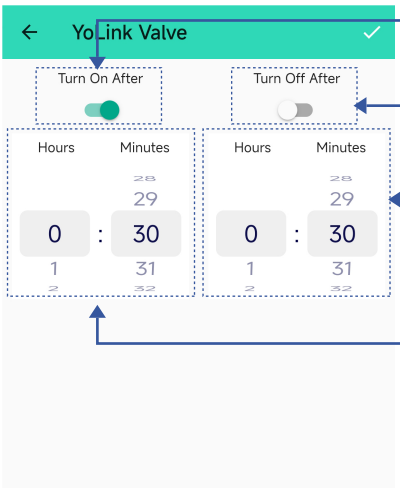

Turn On After Valve
Slide to enable/disable

Turn Off After Valve
Slide to enable/disable

Set the duration
When enabled, the Valve will close after this timer duration has elapsed

Set the duration
When enabled, the Valve will open after this timer duration has elapsed

The timer starts when the settings are saved (by tapping the checkmark at the upper right of the screen).

You can add more timers in Automation settings. Automation settings are saved in the cloud.

The timer will run only once. You can set a new timer after the timer has already run once or after you cancel it.

The timer runs on the device (no internet connection required).

App Functions: Alarm Strategy Screen

You can set up notifications in Alarm Strategy settings, make sure you have enabled App, Email, SMS notification from the app->Menu->Settings->Account Settings->Advanced Settings, and verified your email address and added your phone number in the app.

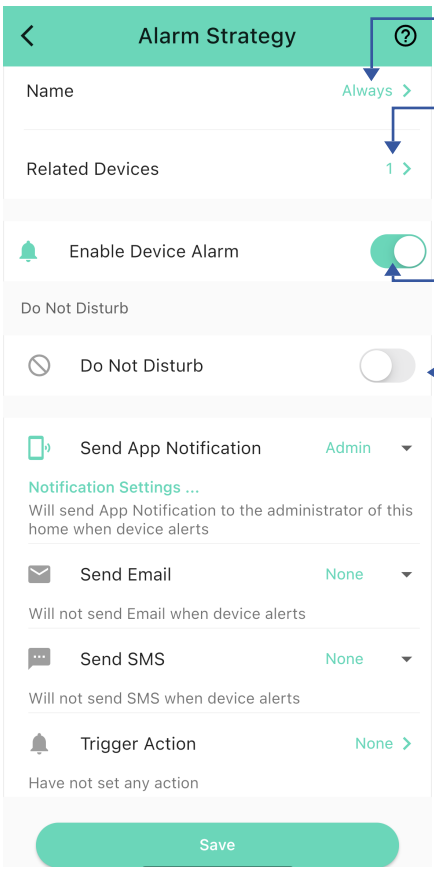

Strategy Name
Tap to edit the name

Related Devices
Tap to add more devices (that can alert) to this strategy, a device can be related to only one strategy

Tap to Enable or Disable The Strategy

Tap to Set Up Dnd (Do Not Disturb)

App Functions: Alarm Strategy Screen, Continued

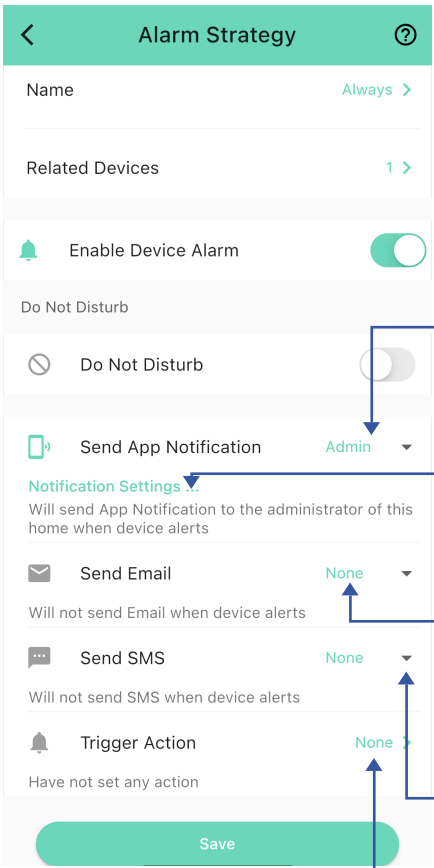

Send App Notification
Tap to select Admin to enable App push, select All, if desired for all members

Notification Settings (iOS only)
Tap to change notification tone, if desired

Send Email
Tap to select Admin to enable email notification, select All, if desired to send to all members

Send SMS
Tap to select Admin to enable limited text messages, select All (subscribe required-starter or standard plan), if desired to send to all members

Trigger Action
Tap to choose trigger actions (YoLink sirens, YoLink SpeakerHubs, scene)

App Functions: Automation

The Valve Controller 2 can be set up as a condition in an automation.

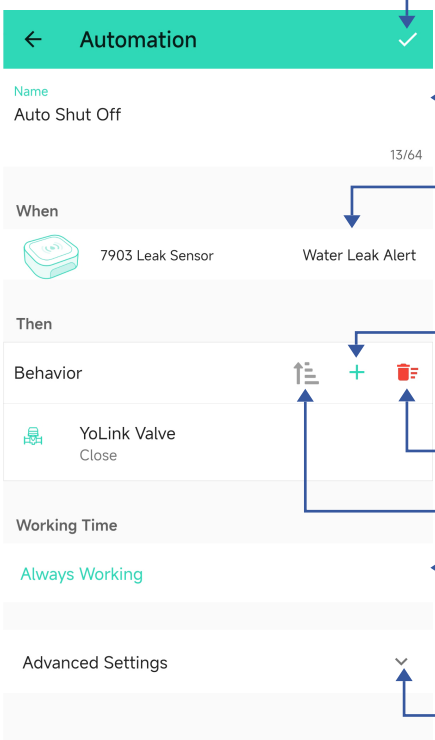

Tap to save the settings

Edit the name of the automation

Tap to set a condition for the automation

Add behavior
Tap to add a behavior

Delete the behavior

Tap to sort behaviors

Always Working
Tap to set when the automation can be activated

Advanced Settings
Tap to edit advanced automation and logging settings

The Automation settings are saved in the cloud.

You can edit the Advanced Settings, including save the log, retry if action fails, notify if action fails, etc.

V Troubleshooting

Problem:

The valve controller is offline

Possible Solutions:

- Ensure the Valve Controller 2 is on. Repeat the Power Up section steps, if needed
- Replace the batteries

Problem:

The valve controller does not respond to the SET button being pressed and/or the Motorized Valve is unresponsive

Possible Solutions:

- Ensure the Valve Controller 2 is on. Repeat the Power Up section steps, if needed
- Double check the cable connectors for correct and tight connections
- Replace the batteries

Control D2D

YoLink Control-D2D is our unique device-to-device control technology. Using Control-D2D, compatible YoLink devices can control or be controlled by other YoLink devices, without a hub or internet connection. One device can control another device, directly.

A device that controls or sends out commands is called the **controller**. A device that is controlled or receives the commands is called the **responder**. An example of a controller are a Water Leak Sensor, while examples of a responder are a Siren Alarm or a Valve Controller 2.

Use of YoLink Control-D2D is optional.

One device can be Control-D2D-paired to up to 128 other devices.

Pairing is separate from the app and any automation, scenes or alarm strategies you may have configured in the app. Use care to not create automations that conflict with Control-D2D-pairing and vice-versa.

During D2D pairing, both the controller and the responder must be in the correct operational state corresponding to their intended behavior. For example, if the controller (leak sensor) is meant to close a valve when the leak detected, the valve should be closed during pairing.

Pairing

1. To configure a Water Leak Sensor 1 as a controller, press and hold the leak sensor's SET button for 5-10 seconds, until the LED quickly blinks green, then release the button.

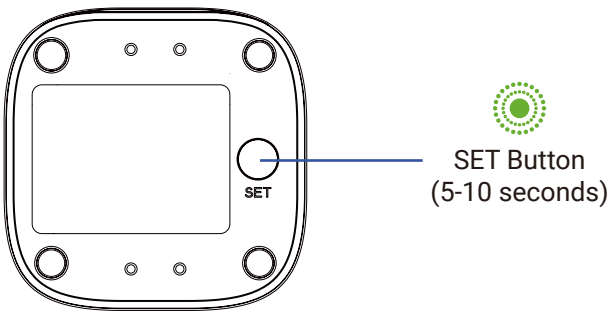

2. To configure the Valve Controller 2 as a responder, first ensure that the valve is in the closed position. Press and hold the controller's SET button for 5-10 seconds until the LED quickly blinks green, then release the button.

Upon pairing, the LED will stop blinking. This may happen after only blinking two or three times.

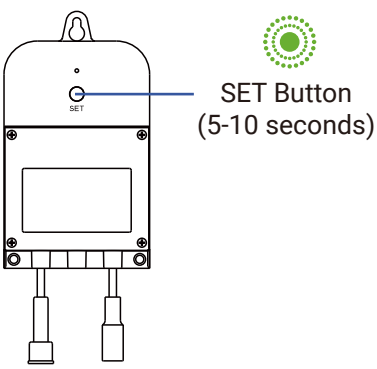

Testing

1. Ensure the valve is in the normal (open) position.

2. Test the water leak sensor (if needed, refer to the sensor user guide for testing instructions).

3. Verify that the valve closes immediately when the leak sensor is activated.

Unpairing

1. At the Water Leak Sensor, press and hold the SET button for **10-15** seconds, until the LED quickly blinks green then red, then release the button.

2. At the Valve Controller 2, press and hold the SET button for **10-15** seconds, until the LED quickly blinks green then red, then release the button.

Upon unpairing, either the Water Leak Sensor LED or the Valve Controller 2 LED will stop blinking and turn off.

At this time, you can test the leak sensor to confirm it no longer activates the valve controller. If you also have any automations or alarm strategies that may also control the valve controller, disable them before testing.

X Factory Reset

Factory reset will erase device settings and restore it to factory default settings. Doing a factory reset will not remove the device from your account and it will not harm the device, or lose any data or require you to redo your automations, etc.

Instructions:

Hold the SET button down for 20-30 seconds, until the LED blinks red and green alternately. Then, release the button. (Holding the button down longer than 30 seconds will abort the factory reset operation)

Factory reset will be complete when the LED stops blinking.

Only deleting a device from the app will remove it from your account. Factory reset will not delete the device from the app.

Firmware Update

Your YoLink products are constantly being improved, with new features added. It is periodically necessary to make changes to your device's firmware. For optimal performance of your system, and to give you access to all available features for your devices, these firmware updates should be installed when they become available.

In the Detail screen of each device, at the bottom, you will see the Firmware section, as shown in the image below. A firmware update is available for your device if it says "#### ready now"

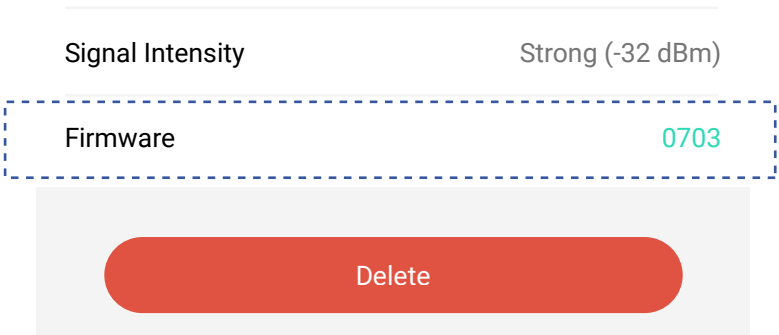

Tap in this area to start the update.

The device will update automatically, indicating progress by percentage-complete. You may use your device during the update, as the update is performed "in the background". The LED will slowly blink green during the update, and the update may continue for several minutes beyond the LED turning off.

Specifications-5003

Housing IP Rating:	IP66
Voltage Out:	DC 9VDC
Output Load Power:	≤ 900 mA max
Standby Power:	≤ 90uA (4 AA Battery)
Cables:	5-Conductor Cable, 7.9" (200.0mm), w/Watertight Connector
Environment Temp. Range:	-4° to 122°F (-20° to 50°C)

Specifications-5003, Continued

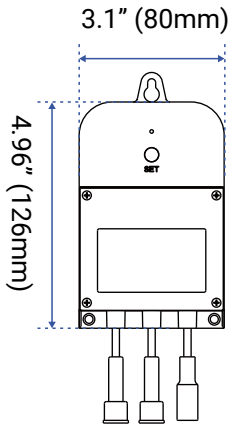

FRONT

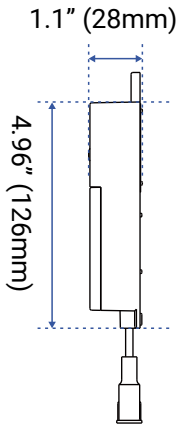

SIDE

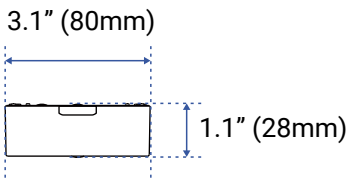

TOP

Z Specifications-DN

Housing IP Rating:	IP65
Voltage:	12 Volts DC
Thread:	NPT Female
Valve Body Material:	Brass, or Stainless Steel (S Suffix)
Open/Closed Time:	Less Than 8 Sec
Max. Torque Force For Actuator:	2.5 N.M
Cables Length:	Approximately 3' (1 Meter)
Max Working Pressure:	145 PSI (1.0MPA)
Working Current:	Max 80 mA When Operating Only
Environment Temp. Range:	32 to 194F (0° to 90°C)

Z Specifications-DN

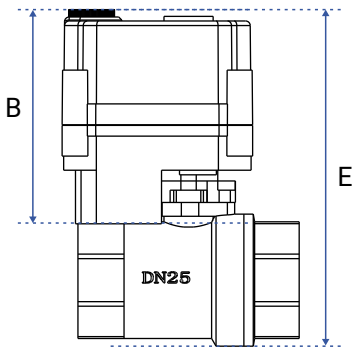

FRONT

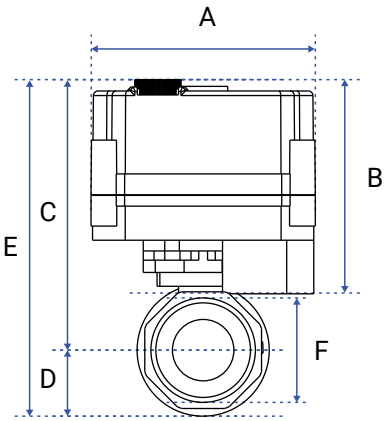

SIDE

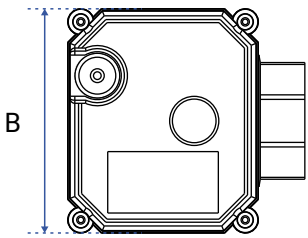

TOP

ASPECT	1/2 INCH	3/4 INCH	1 INCH
A	2.87"(73mm)	2.87"(73mm)	2.87"(73mm)
B	2.74"(69.7mm)	2.74"(69.7mm)	2.74"(69.7mm)
C	3.41"(86.7mm)	3.51"(89.2mm)	4.28"(108.7mm)
D	0.66"(17mm)	0.76"(19.5mm)	0.96"(24.5mm)
E	4.31"(109.6mm)	4.31"(109.6mm)	4.31"(109.6mm)
F	0.98"(25mm)	1.2"(31mm)	1.49"(38mm)

Battery Replacement

1. Using a Phillips screwdriver, loosen the four battery cover screws, and remove the battery compartment cover.

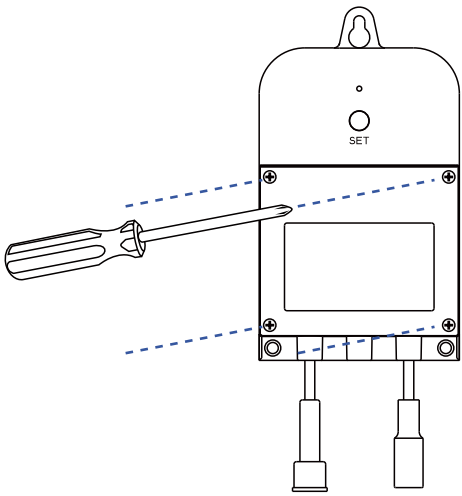

2. Remove all four batteries.

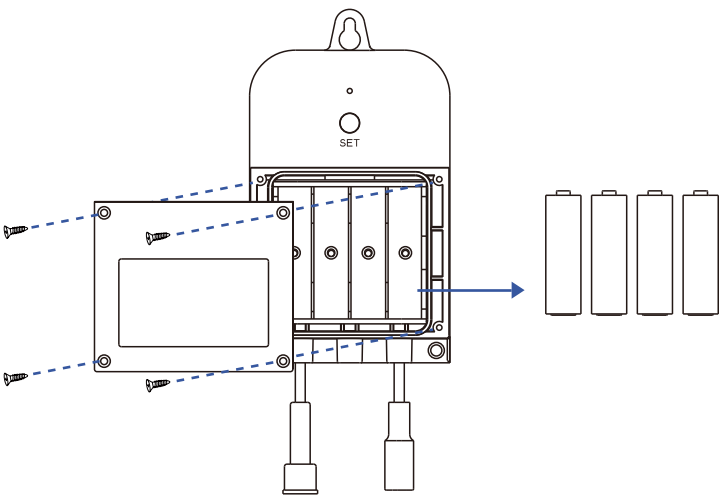

Battery Replacement, Continued

3. Observing the correct battery position and polarity, replace them with new AA batteries

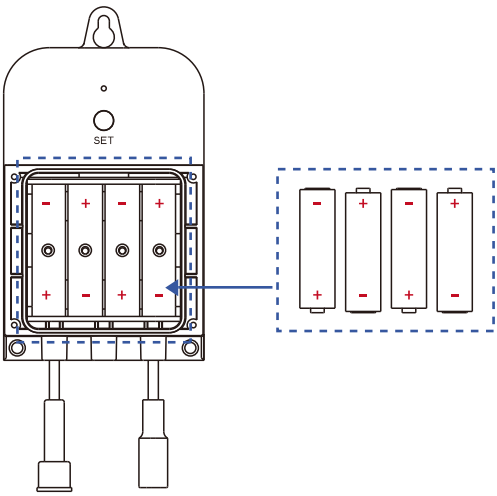

4. Replace the battery compartment cover and tighten the screws.

5. In the app, verify the Valve Controller 2 is online and the batteries are indicated as good.

The Valve Controller 2 can be powered by alkaline or lithium-ion batteries. Do not use rechargeable or other type batteries.

AB Warnings

- Please install, operate and maintain the Valve Controller 2 (and Motorized Valve or Bulldog Valve Robot or valve operator) only as outlined in this manual. Improper installation or use may damage the unit and/or void the warranty.
- Do not install or use the device outside of the temperature and humidity range listed in the environmental specifications.
- If used outdoors, for the maximum life of the device, provide overhead cover or a protective enclosure. This can protect it from the damaging effects of intense direct sunlight and/or rain over a period of years.
- Do not immerse or allow the devices to be immersed or submerged in water.
- Avoid placing the devices in extremely dirty or dusty environments.
- If the device does get dirty, please clean it by wiping it down with a clean dry cloth. Do not use strong chemicals or detergents, which may damage or discolor the exterior and/or damage the electronics, voiding the warranty.
- Do not install the device where it may be subjected to vandalism, abuse, physical impacts or strong vibrations. Physical damage is not covered by the warranty.

AB Warnings, Continued

- Power the controller only with new AA alkaline or lithium-ion batteries. Do not use rechargeable batteries, do not use other type batteries (e.g. zinc blend). Do not mix old and new batteries.

- If storing the controller for extended periods, remove the batteries.

- Please contact Customer Support before attempting to repair, disassemble or modify the device, any of which can permanently damage the device and void the warranty.

AC Warranty

1 Year Limited Mechanical Device Warranty
2 Year Limited Electrical Device Warranty

YoSmart warrants to the original user of this product that it will be free from defects in materials and manufacturing workmanship, under normal use, for 1 year from the date of purchase for motorized valves,valve operator and the Bulldog Valve Robot and for 2 years from the date of purchase for the Valve Controller 2.

The warranty does not cover abuse or misused products, nor does this warranty apply to products that have been improperly installed, were modified, or put to a use other than designed. This warranty does not cover products subjected to acts of God (such as floods, lightning strike or electrical surge, or earthquakes, etc.).

This warranty is limited to repair or replacement of the product only at YoSmart's sole discretion. YoSmart will NOT be liable for any costs associated with removing or reinstalling the product. YoSmart will NOT be liable for direct or indirect or consequential damages to persons or property resulting from the use of this product.

The warranty only covers the cost of replacement products or parts. It does not cover shipping and handling charges or fees.

To implement this warranty, please refer to the Contact Us section of this guide.

FCC Statement

This device complies with part 15 of the FCC Rules. Operation is subject to the following two conditions: (1) This device may not cause harmful interference, and (2) this device must accept any interference received, including interference that may cause undesired operation. Any Changes or modifications not expressly approved by the party responsible for compliance could void the user's authority to operate the equipment.

Note: This equipment has been tested and found to comply with the limits for a Class B digital device, pursuant to part 15 of the FCC Rules. These limits are designed to provide reasonable protection against harmful interference in a residential installation. This equipment generates uses and can radiate radio frequency energy and, if not installed and used in accordance with the instructions, may cause harmful interference to radio communications. However, there is no guarantee that interference will not occur in a particular installation. If this equipment does cause harmful interference to radio or television reception, which can be determined by turning the equipment off and on, the user is encouraged to try to correct the interference by one or more of the following measures:

- Reorient or relocate the receiving antenna.
- Increase the separation between the equipment and receiver.
- Connect the equipment into an outlet on a circuit different from that to which the receiver is connected.

FCC Statement, Continued

- Consult the dealer or an experienced radio/TV technician for help.

The device has been evaluated to meet general RF exposure requirement. The device can be used in portable exposure condition without restriction.

PRODUCT NAME:
VALVE CONTROLLER 2

PARTY:
YOSMART, INC.

TELEPHONE:
831-292-4831

MODEL NUMBER:
YS5003-UC

ADDRESS:
25172 ARCTIC OCEAN DRIVE, SUITE 106
LAKE FOREST, CA 92630 USA

EMAIL:
SERVICE@YOSMART.COM

AE IC Caution

-English:

This device complies with Industry Canada licence-exempt RSS standard(s). Operation is subject to the following two conditions:
(1) This device may not cause interference, and
(2) This device must accept any interference, including interference that may cause undesired operation of the device.
To maintain compliance with RSS-102 RF Exposure guidelines, This equipment should be installed and operated with minimum 20cm distance between the radiator and your body: Use only the supplied antenna.

-French:

Le présentappareilestconf orme aux CNR d' Industrie Canada applicables aux appareils radio exempts de licence. L'exploitationestautorisée aux deux conditions suivantes:
(1) l'appareil ne doit pas produire de brouillage, et
(2) I' utilisateur de l'appareildoit accepter tout brouillageradioélectriquesubi, mêmesi le brouillageest susceptible d'encompromettre le fonctionnement.
Pour être conforme aux lignes directrices d'exposition RF RSS-102, cet équipement doit être installé et exploité à une distance minimale de 20cm entre le radiateur et votre corps: n'utilisez que l'antenne fournie.

AF Contact Us

We are here for you, if you ever need any assistance installing, setting up or using a YoLink app or product!

Need help? For fastest service, please email us 24/7 at **service@yosmart.com**

Or call us at **831-292-4831** (US phone support hours: **Monday - Friday, 9AM to 5PM** Pacific)

You can also find additional support and ways to contact us at:
www.yosmart.com/support-and-service

Or scan the QR code:

Support Home Page

Finally, if you have any feedback or suggestions for us, please email us at
feedback@yosmart.com

Thank you for trusting YoLink!

YoLink Customer Support

YOLINK

25172 Arctic Ocean Drive, Suite 106 Lake Forest, CA 92630
© 2026 YOSMART INC. CALIFORNIA, USA