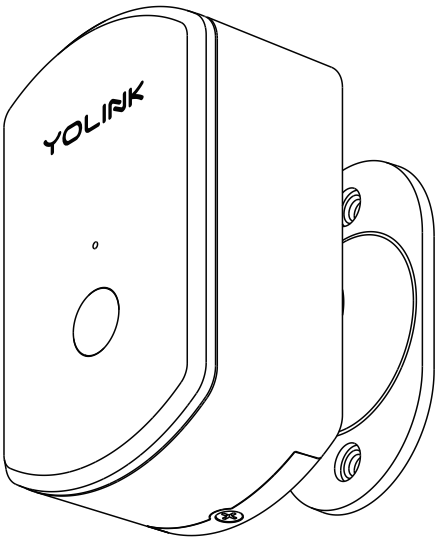

Motion Sensor RT

YS7806-UC

Installation & User Guide

Revision Jun. 02, 2026

TABLE OF CONTENTS

A . Welcome! 01
B . Before You Begin 02
C . In the Box 04
D . Required Items 04
E . Get to Know Your Sensor 05

F . Install the App 06
G . Add Your Sensor to the App 07
H . Power Up 09
I . Installation 10
J . App Functions: Device Screen 16

K . App Functions: Device Details Screen 17
L . App Functions: Alarm Strategy Screen 19
M . App Functions: Smart – Automation 21
N . Control-D2D 22
O . App & 3rd-Party Services 25

P . Battery Replacement 26
Q . Factory Reset 29
R . Firmware Update 30
S . Specifications 31
T . Warnings 33

U . Warranty 35
V . FCC Statement 36
W . Contact Us 38

A Welcome!

Thank you for purchasing YoLink products! We appreciate you trusting YoLink for your smart home & automation needs. Your 100% satisfaction is our goal. If you experience any problems with your installation, with our products or if you have any questions that this manual does not answer, please contact us right away. See the Contact Us section for more info.

Thank you!

YoLink Customer Support

User Guide Conventions

The following icons are used in this guide to convey specific types of information:

⚠️ Very important information (can save you time!)

🤔 Good to know info but may not apply to you

B Before You Begin

Visit our Motion Sensor RT support page on our website, for the latest installation guides, additional resources, information and videos by visiting:

https://www.yosmart.com/support/YS7806-UC

Or by scanning the QR code:

Download the most current version of the user guide by scanning the QR code:

B Before You Begin

Your motion sensor connects to the internet via a YoLink hub, and it does not connect directly to your WiFi or local network. In order for remote access to the device from the app, and for full functionality, a hub is required.
This guide assumes the YoLink app has been installed on your smartphone, and a YoLink hub is installed and online (or your location, apartment, condo, etcetera, is already served by a YoLink wireless network).

C In the Box

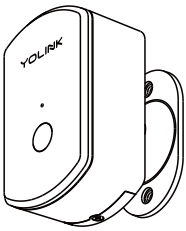

Motion Sensor RT

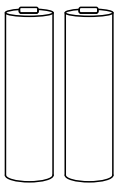

2 x AA Batteries (Installed)

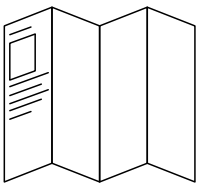

Quick Start Guide

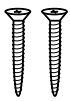

Phillips Screws (2)

D Required Items

You may require these items:

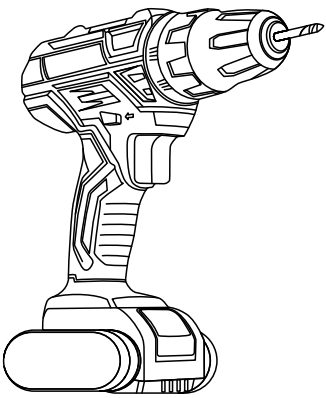

Drill & Bits

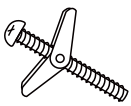

Special Anchors

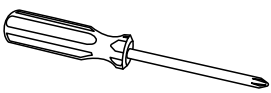

Phillips Screwdriver

E Get to Know Your Motion Sensor RT

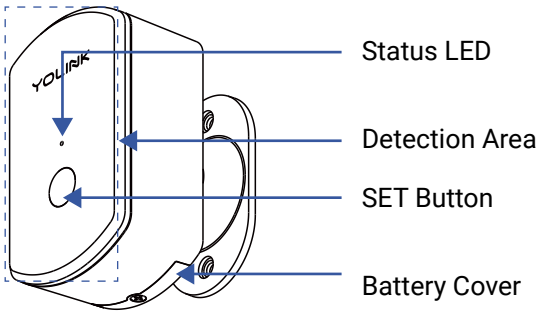

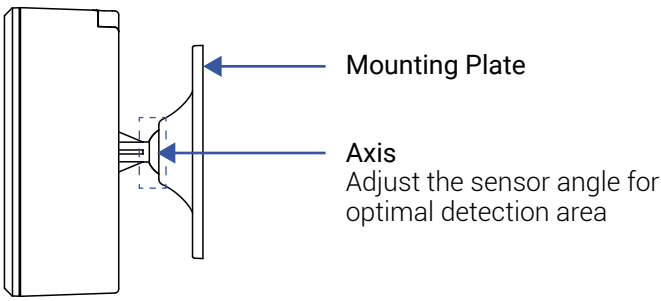

LED Behaviors

Blinking Red Once, then Green Once
Device Start Up

Blinking Red And Green Alternately
Restoring to Factory Default Settings

Blinking Green
Connecting to the Cloud

Fast Blinking Green
Control-D2D Pairing in Progress

Slow Blinking Green
Updating

Blinking Red Once
Device is Connected to the Cloud and is Functioning Normally

Fast Blinking Red
Control-D2D Unpairing in Progress

Fast Blinking Red 5 Times when pressing the SET Button
Batteries Are Low; Replace the Batteries

F Install the App

If you are new to YoLink, please install the app on your phone or tablet, if you have not already. Otherwise, please proceed to the next section.

Scan the appropriate QR code below or find the "YoLink app" on the appropriate app store.

Download on the App Store

Apple phone/tablet
iOS 9.0 or higher

Available on Google Play

Android phone/tablet
6.0 or higher

Open the app and tap **Sign up for an account**. You will be required to provide a username and a password. Follow the instructions, to set up a new account. Allow notifications, when prompted.

You will immediately receive a welcome email from no-reply@yosmart.com with some helpful information. Please mark the yosmart.com domain as safe, to ensure you receive important messages in the future.

Log in to the app using your new username and password.

The app opens to the **Favorite** screen. This is where your favorite devices and scenes will be shown. You can organize your devices by room, in the **Rooms** screen, later.

G Add Your Motion Sensor RT to the App

1. Tap **Add Device** (if shown) or tap the scanner icon:

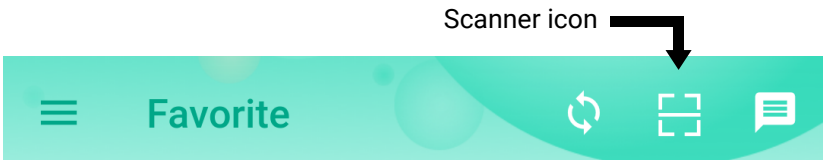

2. Approve access to your phone's camera, if requested. A viewfinder will be shown on the app.

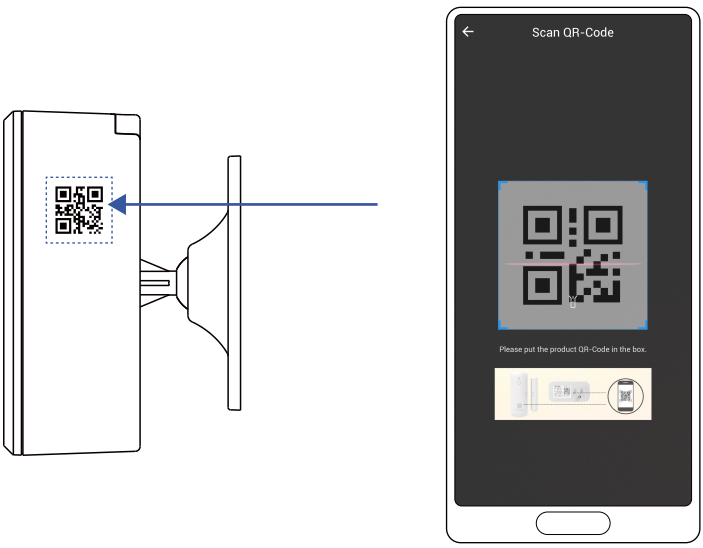

3. Hold the phone over the QR code so that the code appears in the viewfinder. If successful, the **Add Device** screen will be displayed.

G Add Your Motion Sensor RT to the App, Continued

4. You can change the device name and assign it to a room later. Tap **Bind device**.

5. If successful, the screen will appear as shown. Tap **Done**.

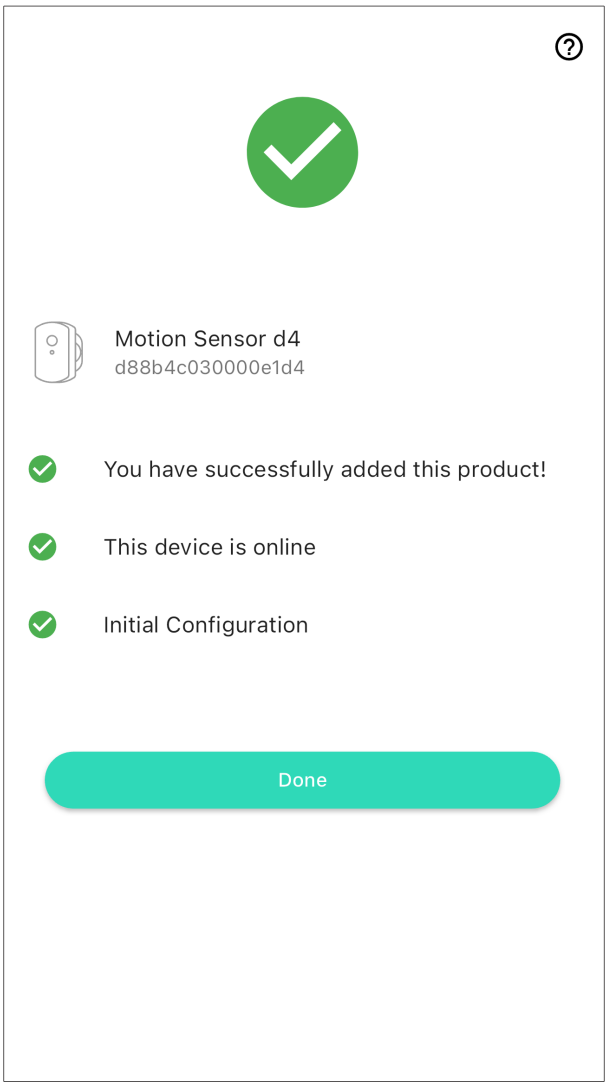

H Power Up

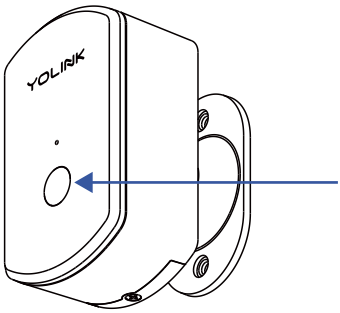

Turn on the motion sensor by briefly pressing the SET button, until you see the LED flash red then green.

I Installation

Consideration:

To ensure optimal performance of the Motion Sensor RT, please follow the guidelines below when installing the device:

1. Keep Away from Large Metal Objects

Avoid installing the sensor near large metal items such as metal cabinets, machinery, or structural elements. Metal may block or reflect microwave signals and interfere with detection accuracy.

2. Maintain Proper Distance Between Devices

When installing multiple sensors:

a) Maintain a minimum distance of 1 meter (3.3 feet) between devices.

b) Ensure the detection areas are parallel or facing away from one another.

c) Avoid positioning sensors so that their detection areas or antennas are facing each other directly.

3. Environment Can Affect Detection Range

In enclosed environments with walls or obstacles, the sensor may achieve better detection range due to microwave signal reflection. In contrast, open areas may result in shorter detection distances.

4. Avoid Installation Near Vibration or Airflow Sources

Do not install the sensor near air conditioner outlets or other sources of constant airflow or vibration. These conditions may negatively impact detection stability.

5. Face Motion for Best Performance

For optimal results, the sensor should be installed so that moving objects approach the detection area directly (head-on), rather than crossing from the side.

6. Avoid Blocking the Detection Area with Metal

Do not use metal covers or enclosures that obstruct the detection area. Microwave signals do not penetrate metal effectively. Materials such as plastic, wood, and ceramic are acceptable and allow signals to pass through with minimal impact.

7. Do Not Aim Detection Area at Metal Surfaces

Avoid pointing the detection area directly toward large metal surfaces (e.g., equipment, walls, or pipes), which may absorb or reflect signals and affect performance.

Installation

8. Secure Installation Required

Mount the sensor on a stable surface. Avoid areas with significant mechanical vibration or nearby rotating or swinging objects, as these may cause false triggers.

Due to the use of radar sensing technology, motion or presence very close to the back side of the device may also be detected. Please take this into consideration when selecting the installation location.

Installation

Installation Steps:

1. Rotate the Sensor to Access the Mounting Area

To expose the mounting holes on the back plate:

Temporarily rotate the sensor body to a perpendicular (sideways) position relative to the mounting plate.

This is necessary because the sensor, in its default position, blocks the screw holes.

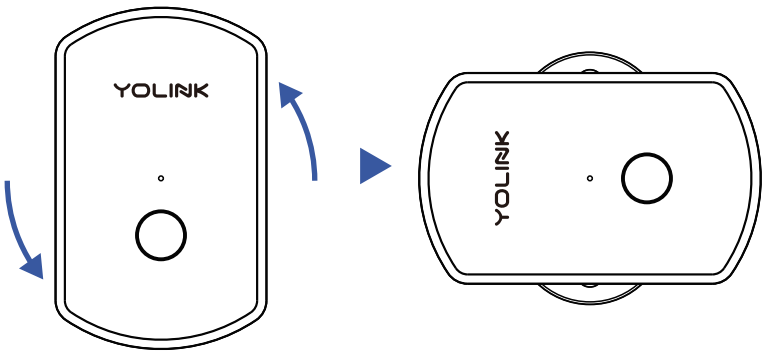

Installation

2. Install the Top Screw

With the sensor rotated sideways, tilt the sensor body downward to fully expose the top screw hole.

Insert and tighten the top screw using a Phillips screwdriver.

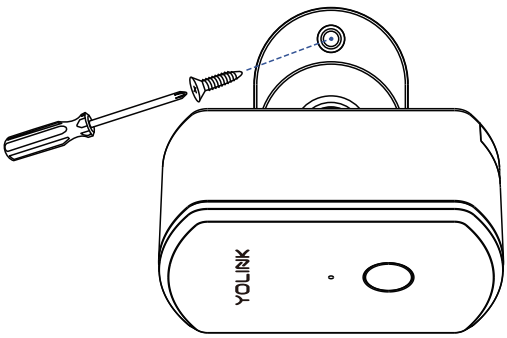

3. Install the Bottom Screw

Then, tilt the sensor body upward to fully expose the bottom screw hole.

Insert and tighten the bottom screw securely.

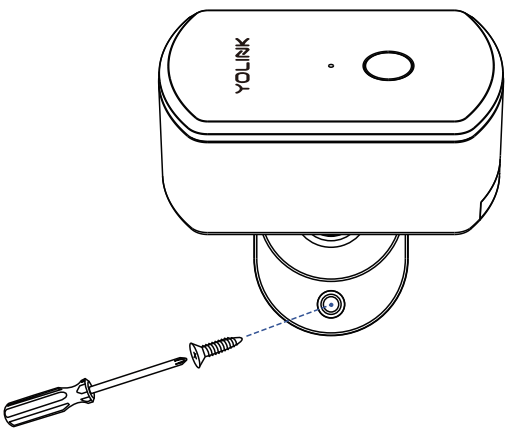

4. Adjust the Detection Angle

After mounting, rotate the sensor body back to its normal operating position.

Aim the detection area toward the target zone for optimal performance. The built-in axis mechanism will hold the sensor in place.

5. Confirm Stability

Gently pull on the sensor to ensure it is securely attached and maintains its position after adjustment.

Test the Motion Sensor:

1. Test the sensor. It is very important that you test the sensor as realistically as possible, to ensure it works as required for your application. With your phone in-hand, using the app, refer to the Motion Sensor's status as you walk through the coverage area. You may need to adjust the angle or location and/or the sensitivity. Motion sensitivity can be set in the app.

J App Functions: Device Screen

In the app, tap on your Motion Sensor RT icon. Your Motion Sensor RT main screen should be similar to the one shown below.

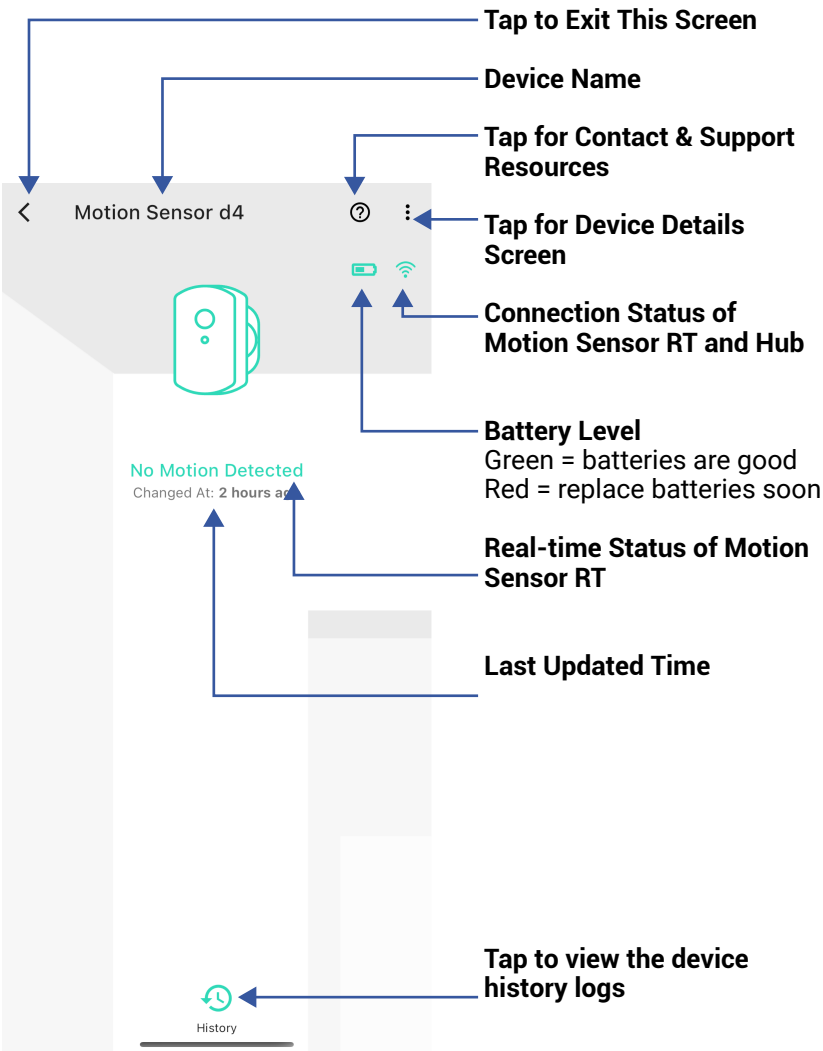

K App Functions: Device Details Screen

Tap the three dots (in the upper right corner) to open the Motion Sensor RT **Details** screen. Your Motion Sensor RT's screen should be similar to the one shown below.

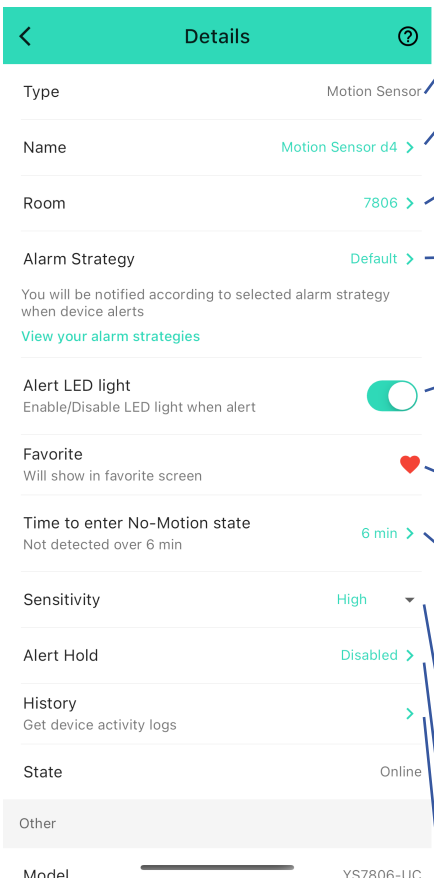

Device Type

Device Name
(Tap to Edit)

Room
(Tap to Edit)

Alarm Strategy
Tap to edit the sensor's Alarm Strategy

Alert LED
Tap to enable or disable the LED when alert

Favorite
(Red if Favorite, Tap to Edit)

Time to enter No-Motion state
After it detects motion, the motion sensor will update its status to "no motion detected" once the pre-set "time to enter no motion state" has passed without any further motion being detected

Sensitivity
Higher sensitivity may lead to more false alarms, while lower one may reduce detection range

Alert Hold
It won't send new alerts for the set time after it first detects motion

Device history
Tap to view device history

K App Functions: Device Details Screen, Continued

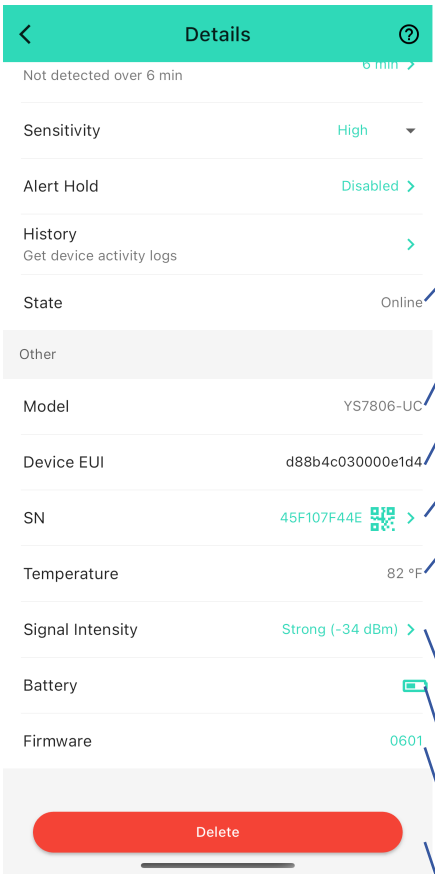

State

Model Number

Device EUI
Unique Identifier Number

Device Serial Number

Temperature
It is an auxiliary function and the temperature updates are not frequent, it will only update when the sensor sends an alert, heartbeat signal, or the SET button is pressed

Signal Intensity
(From YoLink Hub)

Battery

Firmware Revision
(Refer to page 30)

Remove Device from Current Account
Tap to delete the device from your YoLink account

L App Functions: Alarm Strategy Screen

You can set up notifications in Alarm Strategy settings, make sure you have enabled App, Email, SMS notification from the app->Menu-> Settings->Account Settings->Advanced Settings, and verified your email address and added your phone number in the app.

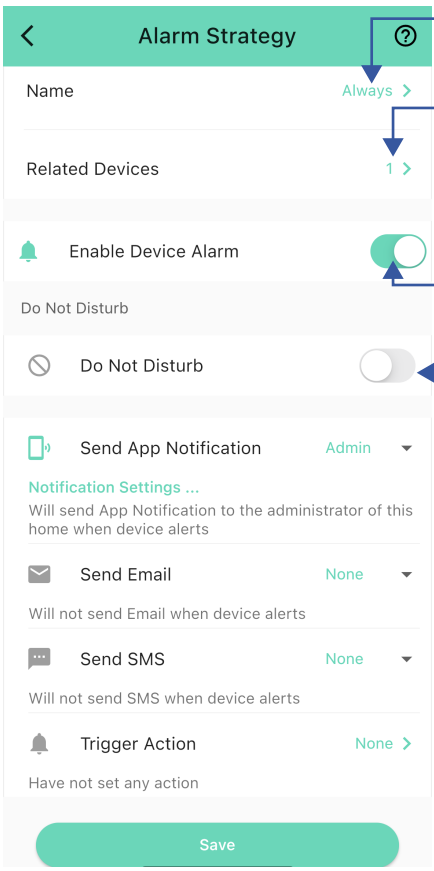

Strategy Name
Tap to edit the name

Related Devices
Tap to add more devices (that can alert) to this strategy, a device can be related to only one strategy

Tap to Enable or Disable The Strategy

Tap to Set Up Dnd (Do Not Disturb)

L App Functions: Alarm Strategy Screen, Continued

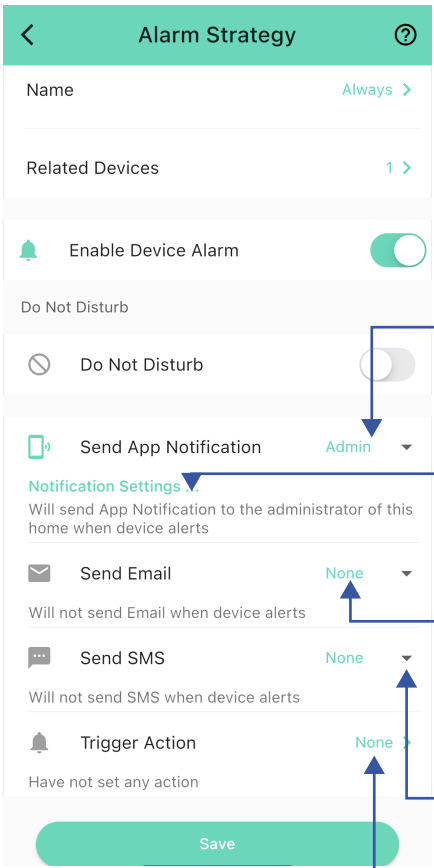

Send App Notification
Tap to select Admin to enable App push, select All, if desired for all members

Notification Settings (iOS only)
Tap to change notification tone, if desired

Send Email
Tap to select Admin to enable email notification, select All, if desired to send to all members

Send SMS
Tap to select Admin to enable limited text messages, select All (subscribe required-starter or standard plan), if desired to send to all members

Trigger Action
Tap to choose trigger actions (YoLink sirens, YoLink SpeakerHubs, scene)

App Functions: Smart - Automation

The Motion Sensor RT can be set up as a condition in automation.

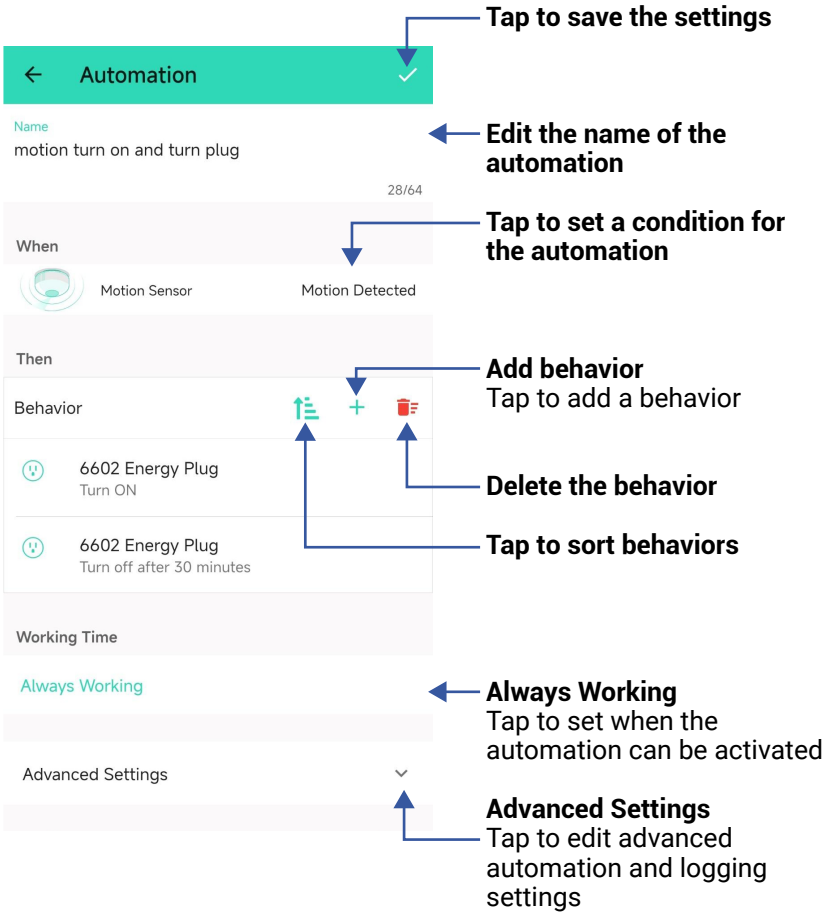

The Automation settings are saved in the cloud.

You can edit the Advanced Settings, including save the log, retry if action fails, notify if action fails, etc.

N Control D2D

YoLink Control-D2D (device-to-device) pairing is a feature unique to YoLink products. One device can be paired to one (or more) devices. When two or more devices are paired, a link is created, “locking-in” the behavior, so that the device(s) will carry out their paired behavior when required, regardless of a connection to the internet or cloud, and even without AC power (in the case of battery-powered or battery backed-up devices). For example, a Door Sensor can be paired to a Siren Alarm, so that when the door is opened, the siren is activated.

Several important points:

- The use of Control-D2D is entirely optional. It is more common to use the app’s automation and scene settings to create desired behaviors, such as motion sensors turning on the lights automatically. Your application may require functionality during the loss of internet/WiFi, in which case Control-D2D pairing may be preferred.

- A device that controls another device is referred to as a Controller. The device that is controlled is referred to as a Responder.

N Control D2D, Continued

- While online, any paired behaviors as well as automation and scene settings (desired siren behaviors set in advance by you, such as the door sensor/siren example) will both be carried out. Paired behaviors and app settings can coexist, but use care to not create conflicting actions between the two, as the device may not operate as desired.

- A device can have up to 128 pairings.

The following instructions use pairing your Motion Sensor RT with a YoLink Plug as an example, when the motion is detected, then turn on the plug.

1. To configure your Motion Sensor RT as a controller, press and hold the SET button for 5-10 seconds until the LED quickly blinks green, then, release the button.

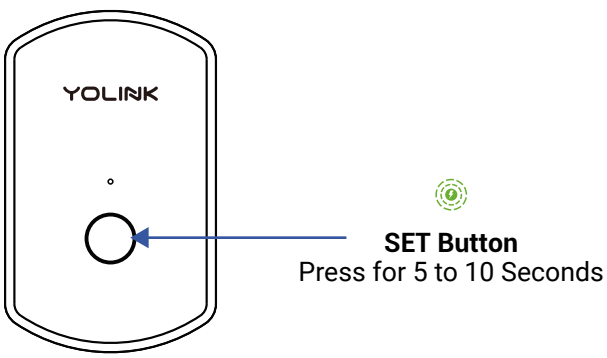

N Control D2D, Continued

2. To configure a YoLink Plug as the responder, turn on the plug, press and hold the POWER button for 5-10 seconds until the LED quickly blinks green, then, release the button.

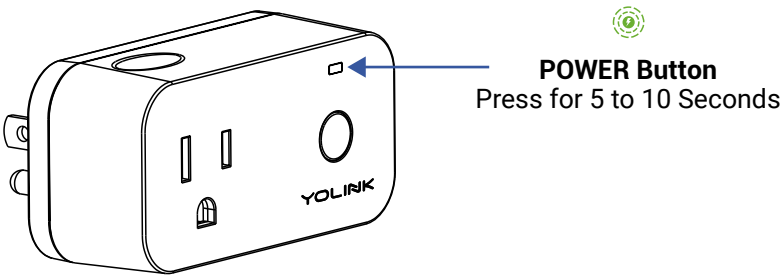

3. Upon pairing, the LED will stop blinking (this may happen after only blinking two or three times).

When the motion is detected, the plug will turn on.

Unpair your Motion Sensor RT:

1. On the Motion Sensor RT, press the hold the SET button for 10 to 15 seconds, until the LED quickly blinks red, then release the button.

2. On the Plug, press and hold the POWER button for 10 to 15 seconds, until the LED quickly blinks red, then release the button.

N Control D2D, Continued

The LED will flash green prior to the 10 second mark, going into pairing mode, but keep pressing until the LED flashes red. The Controller's pairing is now removed. This Motion Sensor RT will no longer control the plug.

O App & 3rd-Party Services

The YoLink Motion Sensor RT works with several voice assistants like Alexa, and it works with other automation platforms such as IFTTT and Home Assistant.

To set up 3rd-party integrations (Alexa and IFTTT), in the app, go to Settings, Third-Party Services, and follow the instructions.

Refer to the Home Assistant website and the YoLink integration page for instructions.

https://www.home-assistant.io/integrations/yolink/

P Battery Replacement

Before starting, remove the device from the wall by loosening the screw that secures it to the mounting plate.

Tools Required :

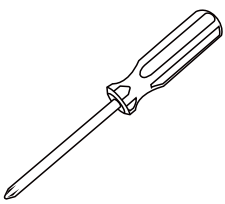

Small Phillips Screwdriver

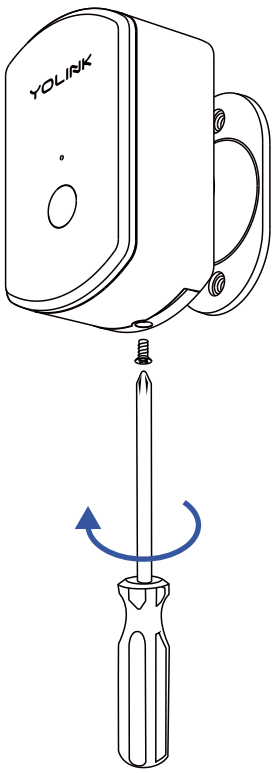

1. Use a screwdriver to remove the screw securing the battery cover.

P Battery Replacement

2 Tilt the mounting plate toward the side with the arrow icon, then press firmly with your palm to slide the mounting plate in the direction of the arrow to remove the battery cover.

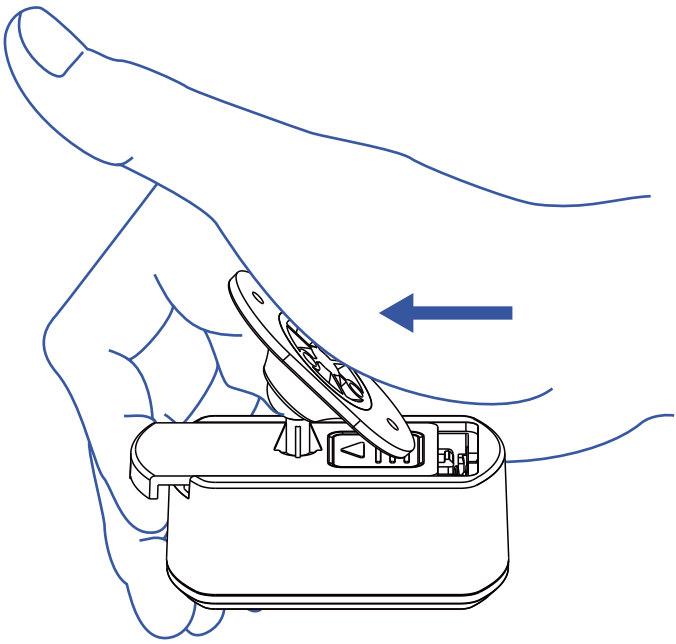

3 Remove the old batteries and insert two new AA batteries, making sure the polarity is correct.

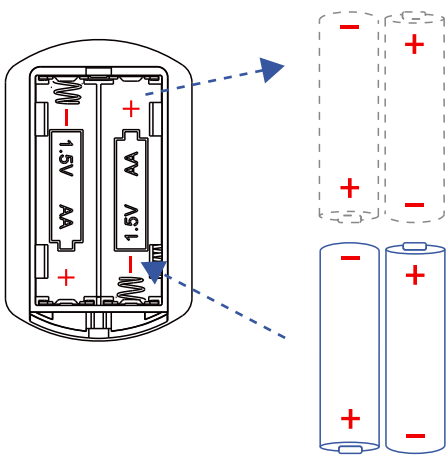

P Battery Replacement

4 Reattach the cover and securely tighten the screw.

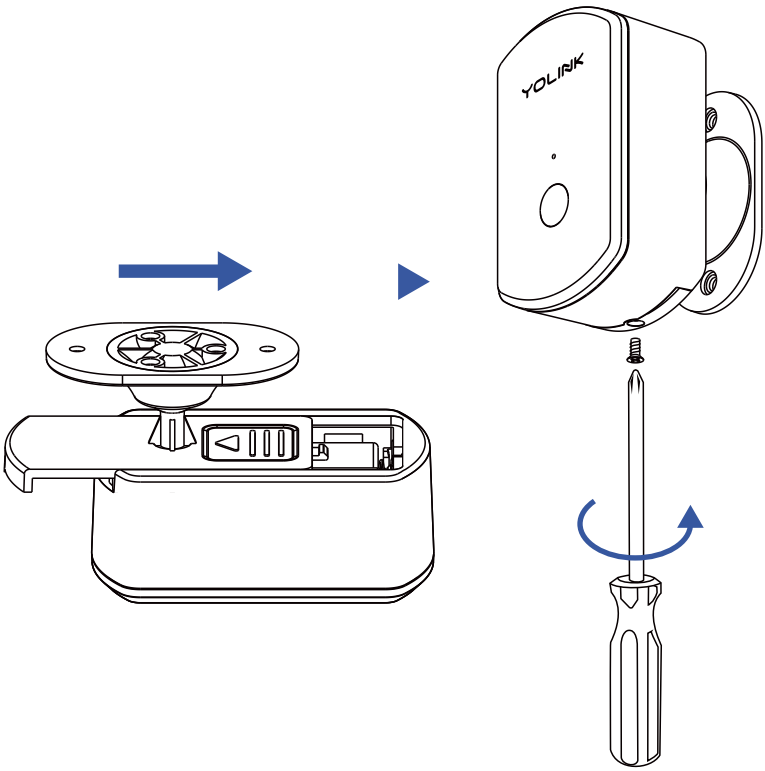

5 Press the SET button on the device, then check in the app to confirm the sensor is online and the battery status shows full charge.

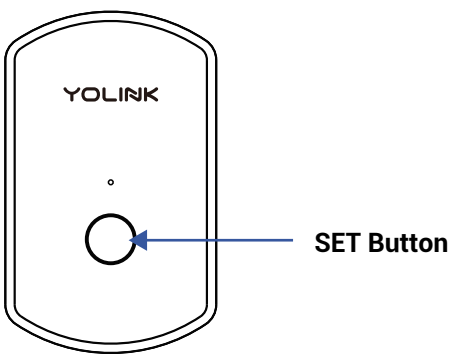

Q Factory Reset

Factory reset will erase device settings and restore it to factory default settings. Doing a factory reset will not remove the device from your account and it will not harm the device, or lose any data or require you to redo your automations, etc.

Instructions:

Hold the SET button down for 20-30 seconds, until the LED blinks red and green alternately. Then, release the button. (Holding the button down longer than 30 seconds will abort the factory reset operation)

Factory reset will be complete when the LED stops blinking.

PLEASE NOTE: Only deleting a device from the app will remove it from your account. Factory reset will not delete the device from the app.

R Firmware Update

Your YoLink products are constantly being improved, with new features added. It is periodically necessary to make changes to your device's firmware. For optimal performance of your system, and to give you access to all available features for your devices, these firmware updates should be installed when they become available.

In the Detail screen of each device, at the bottom, you will see the Firmware section, as shown in the image below. A firmware update is available for your device if it says “#### ready now”

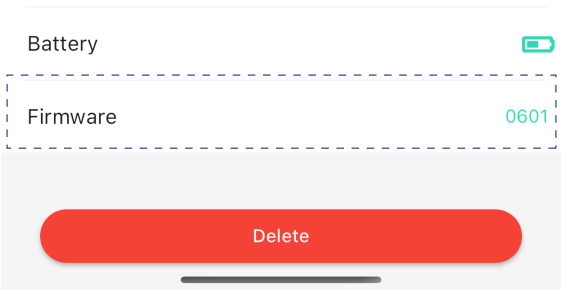

Tap in this area to start the update.

The device will update automatically, indicating progress by percentage-complete. You may use your device during the update, as the update is performed "in the background". The LED will slowly blink green during the update, and the update may continue for several minutes beyond the LED turning off.

Specifications

Voltage:	Alkaline Battery 1.5V AA*2 (3V)
Device Current Draw:	≤ 160mA(operating) ≤ 110uA(standby)
Working Temperature:	-4°F - 122°F (-20°C - 50°C)
Working Humidity:	≤ 95% non-condensing
Dimensions, Imperial (L x W x D):	2.83 x 1.75 x 1.95 inches
Dimensions, Metric (L x W x D):	72 x 44.5 x 49.5 mm

Specifications, Continued

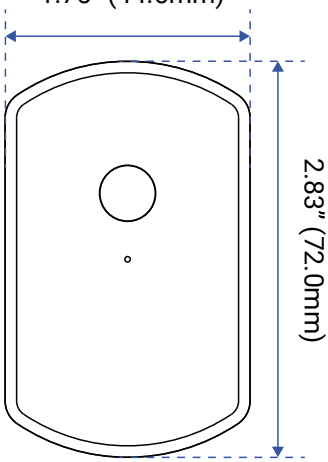

FRONT

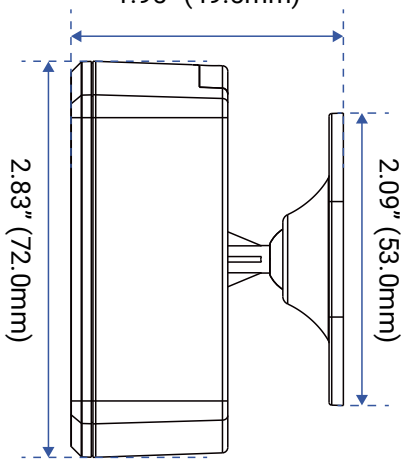

TOP

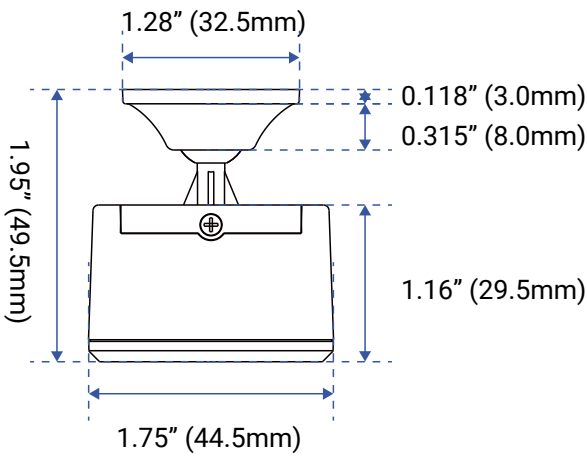

SIDE

Warnings

- Please install, operate and maintain the Motion Sensor RT only as outlined in this manual. Improper use may damage the unit and/or void the warranty
- Use only new, name brand, alkaline non-rechargeable AA batteries
- Do not use rechargeable batteries
- Do not use zinc blend batteries
- Do not mix new and old batteries
- Do not puncture or damage batteries. Leakage can cause harm on skin contact, and is toxic if ingested
- Do not dispose of batteries in fire as they may explode! Please follow local battery disposal procedures
- Do not install or use the sensor outside of the temperature and humidity range listed in the Environmental section in Specifications
- Install or use this device only in clean environments. Extremely dusty or dirty environments may prevent the proper operation of this device, and will void the warranty

Warnings, Continued

- Do not install or use this device where it will be subjected to high temperatures and/or open fame
- Do not obstruct the opening of the housing
- Do not install or use this device where it will be subjected to physical impacts and/or strong vibration. Physical damage is not covered by the warranty
- To avoid damaging the device, if storing the device for an extended period, remove the batteries
- Please contact Customer Service before attempting to repair, disassemble or modify the device, any of which can void the warranty and permanently damage the device

Warranty

2 Year Limited Electrical Warranty

YoSmart Inc. warrants to the original user (“customer”) of this product that it will be free from defects in materials and workmanship, under normal use, for 2 years from the date of purchase. This warranty does not apply to devices that have been improperly installed, modified, put to a use other than designed, or subjected to acts of God (such as floods, lightning, earthquakes, etc.). This warranty does not cover neglected or abused products. This warranty is limited to the repair or replacement of the device, only, at YoSmart's sole discretion. YoSmart will NOT be liable for the cost of installing, removing, nor reinstalling this product, nor direct, indirect, or consequential damages to persons or property resulting from the use of this product. This warranty only covers the cost of replacement parts or replacement units, it does not cover shipping & handling fees. The customer must provide proof of purchase, in the form of the original purchase invoice or order number. The purchase must have been made from an authorized seller.

To implement this warranty please contact us by one of the methods listed on the Contact Us page of this user guide.

V FCC Statement

This device complies with part 15 of the FCC Rules. Operation is subject to the following two conditions: (1) This device may not cause harmful interference, and (2) this device must accept any interference received, including interference that may cause undesired operation. Any Changes or modifications not expressly approved by the party responsible for compliance could void the user's authority to operate the equipment.

Note: This equipment has been tested and found to comply with the limits for a Class B digital device, pursuant to part 15 of the FCC Rules. These limits are designed to provide reasonable protection against harmful interference in a residential installation. This equipment generates uses and can radiate radio frequency energy and, if not installed and used in accordance with the instructions, may cause harmful interference to radio communications. However, there is no guarantee that interference will not occur in a particular installation. If this equipment does cause harmful interference to radio or television reception, which can be determined by turning the equipment off and on, the user is encouraged to try to correct the interference by one or more of the following measures:

- Reorient or relocate the receiving antenna.
- Increase the separation between the equipment and receiver.
- Connect the equipment into an outlet on a circuit different from that to which the receiver is connected.

- Consult the dealer or an experienced radio/TV technician for help.

The device has been evaluated to meet general RF exposure requirement. The device can be used in portable exposure condition without restriction.

PRODUCT NAME:
MOTION SENSOR RT

PARTY:
YOSMART, INC.

TELEPHONE:
831-292-4831

MODEL NUMBER:
YS7806-UC

ADDRESS:
25172 ARCTIC OCEAN DRIVE, SUITE 106
LAKE FOREST, CA 92630 USA

EMAIL:
SERVICE@YOSMART.COM

Contact Us

We are here for you, if you ever need any assistance installing, setting up or using a YoLink app or product!

Need help? For fastest service, please email us 24/7 at **service@yosmart.com**

Or call us at **831-292-4831** (US phone support hours: **Monday - Friday, 9AM to 5PM** Pacific)

You can also find additional support and ways to contact us at:
www.yosmart.com/support-and-service

Or scan the QR code:

Support Home Page

Finally, if you have any feedback or suggestions for us, please email us at
feedback@yosmart.com

Thank you for trusting YoLink!

YoLink Customer Support

YOLINK

25172 Arctic Ocean Drive, Suite 106 Lake Forest, CA 92630
© 2026 YOSMART INC. CALIFORNIA, USA