YOLINK

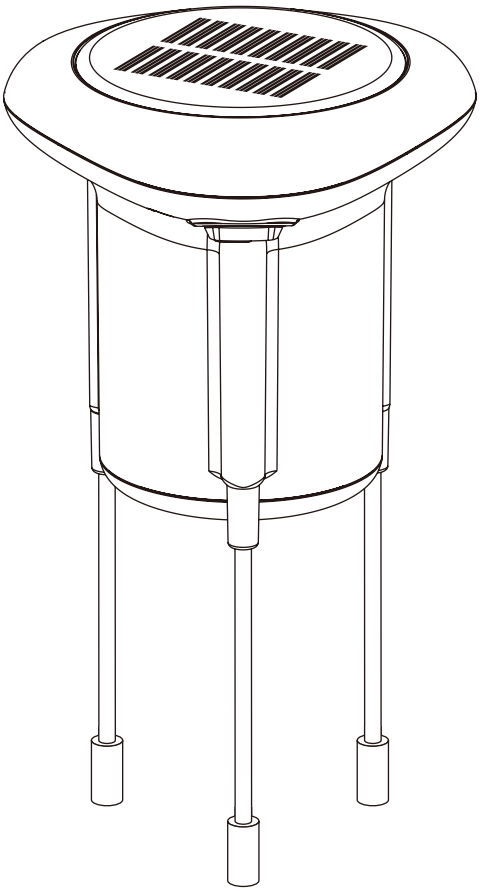

Solar Soil Detector

YS8009-UC

Installation & User Guide

Revision Jun. 02, 2026

Contents

A . Welcome! 01
B . Before You Begin 02
C . In the Box 03
D . Get to Know Your Sensor 04
E . Battery Installation 05

F . Power Up 06
G . Install the App 07
H . Add Your Sensor to the App 08
I . Installation 10
J . About Sensor Refresh Rates 14

K . App Functions: Device Screen 16
L . App Functions: Device Details Screen 17
M . App aFunctions: Alert Settings Screen 19
N . App Functions: Chart Screen 20
O . App Functions: Alarm Strategy Screen 21

P . App Functions: Automation 23
Q . 3rd-Party Services 24
R . Specifications 25
S . Factory Reset 27
T . Firmware Updates 28

U . Warnings 30
V . Warranty 31
W . FCC Statement 32
X . Contact Us 34

A Welcome

Thank you for purchasing YoLink products! We appreciate you trusting YoLink for your smart home & automation needs. Your 100% satisfaction is our goal. If you experience any problems with your installation, with our products or if you have any questions that this manual does not answer, please contact us right away. See the Contact Us section for more info.

Thank you!

YoLink Customer Support

User Guide Conventions

The following icons are used in this guide to convey specific types of information:

⚠️ Very important information (can save you time!)

🤔 Good to know info but may not apply to you

B Before You Begin

Visit our Solar Soil Detector support page on our website, for the latest installation guides, additional resources, information and videos by visiting:

https://www.yosmart.com/support/YS8009-UC

Or by scanning the QR code:

Download the most current version of the user guide by scanning the QR code:

B Before You Begin, Continued

Your Solar Soil Detector connects to the internet via a YoLink hub, and it does **not** connect directly to your WiFi or local network. In order for remote access to the device from the app, and for full functionality, a hub is required. This guide assumes the YoLink app has been installed on your smartphone, and a YoLink hub is installed and online (or your location, apartment, condo, etcetera, is already served by a YoLink wireless network).

C In the Box

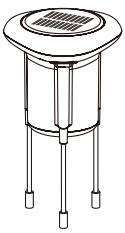

Solar Soil Detector

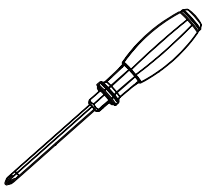

Phillips Screwdriver

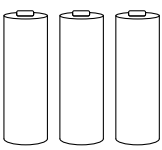

3xAA Ni-MH Rechargeable Battery

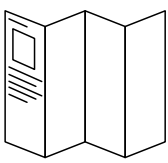

Quick Start Guide

D Get to Know Your Sensor

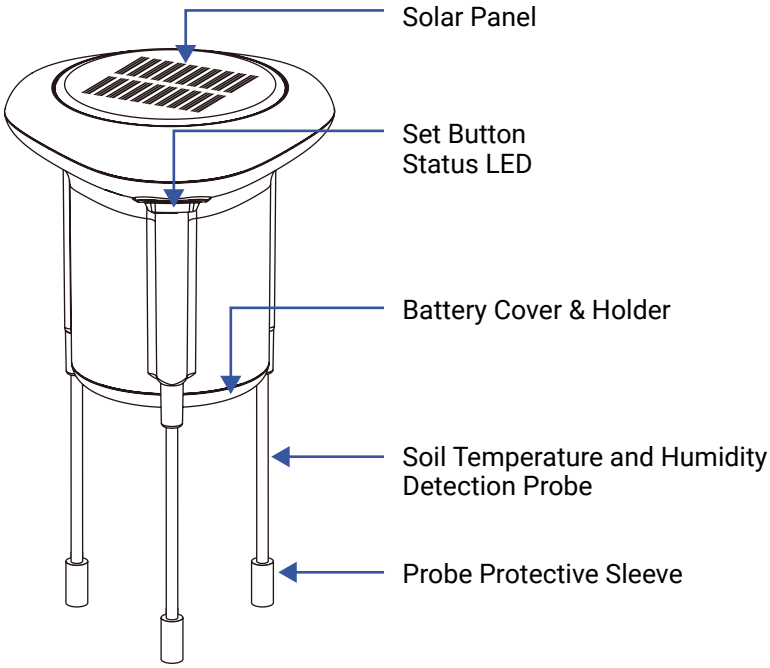

LED Behaviors

Blinking Red Once, then Green Once
Device Start-Up

Blinking Red And Green Alternately
Restoring to Factory Defaults

Blinking Green
Connecting to Cloud or Functioning Normally

Slow Blinking Green
Updating

Blinking Red Once
Device Alerts

Fast Blinking Red 5 Times when pressing the SET Button
Low Battery, Replace Batteries Soon

E Battery Installation

① Ensure the device is completely dry before installing the batteries; any moisture or dirt can seep inside and cause damage.

② Follow the polarity markings in the battery holder and align each battery's positive (+) and negative (−) ends accordingly.

1. Remove the waterproof rubber from the battery cover.

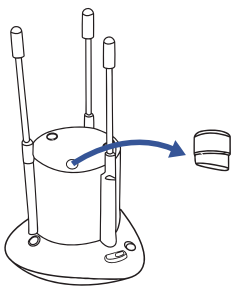

2. Use a Phillips screwdriver to loosen the screws on the cover.

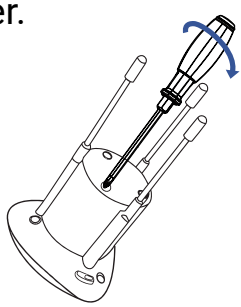

3. Lift off the cover, remove the battery holder, and insert the batteries.

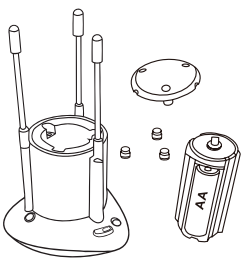

4. Reinstall the holder, replace the cover, and tighten the screws firmly.

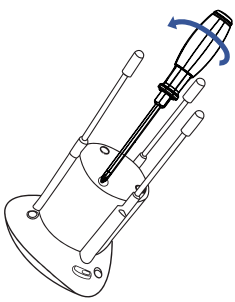

E Battery Installation, Continued

5. Press the rubber back in, making sure the angled side faces upward to keep the compartment watertight.

F Power Up

Turn on the Soil Detector by briefly pressing the SET button, until you see the LED flash red then green.

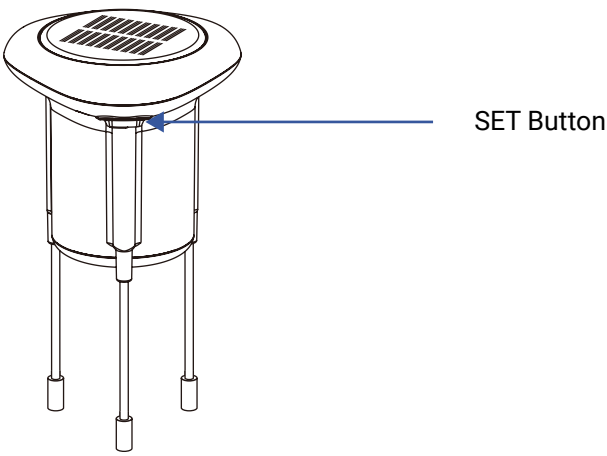

G Install the App

If you are new to YoLink, please install the app on your phone or tablet, if you have not already. Otherwise, please proceed to the next section.

Scan the appropriate QR code below or find the "YoLink app" on the appropriate app store.

Download on the App Store

Apple phone/tablet
iOS 9.0 or higher

Available on Google Play

Android phone/tablet
6.0 or higher

Open the app and tap **Sign up for an account**. You will be required to provide a username and a password. Follow the instructions, to set up a new account. Allow notifications, when prompted.

You will immediately receive a welcome email from no-reply@yosmart.com with some helpful information. Please mark the yosmart.com domain as safe, to ensure you receive important messages in the future.

Log in to the app using your new username and password.

The app opens to the **Favorite** screen. This is where your favorite devices and scenes will be shown. You can organize your devices by room, in the **Rooms** screen, later.

H Add Your Sensor to the App

1. Tap **Add Device** (if shown) or tap the scanner icon:

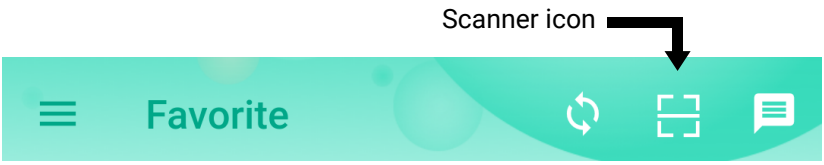

2. Approve access to your phone's camera, if requested. A viewfinder will be shown on the app.

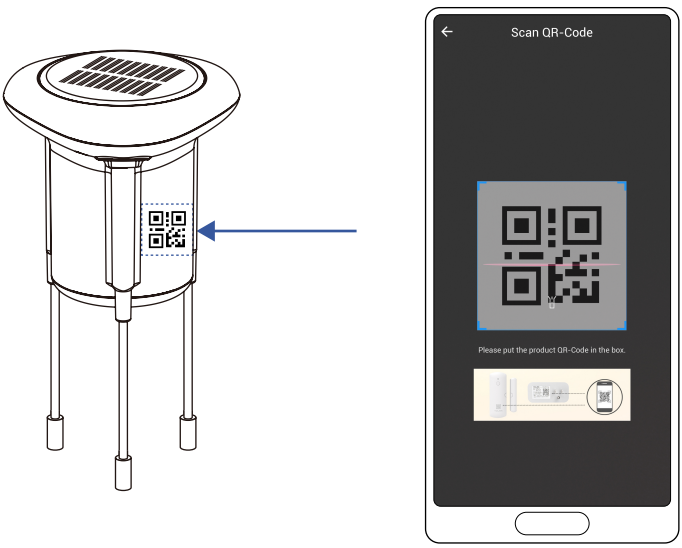

3. Hold the phone over the QR code so that the code appears in the viewfinder. If successful, the **Add Device** screen will be displayed.

H Add Your Sensor to the App, Continued

4. You can change the device name and assign it to a room later. Tap **Bind device**.

5. If successful, the screen will appear as shown. Tap **Done**.

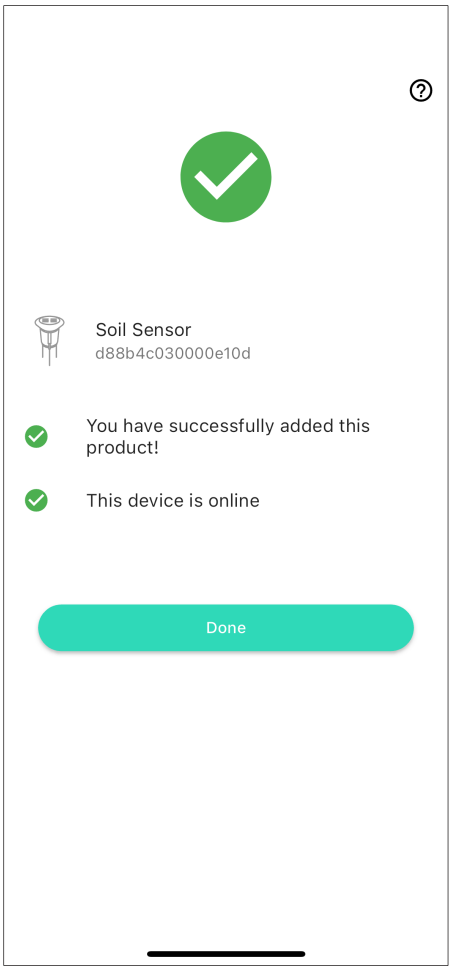

Installation

Probe Insertion

1. Remove the protective sleeve from the probe.

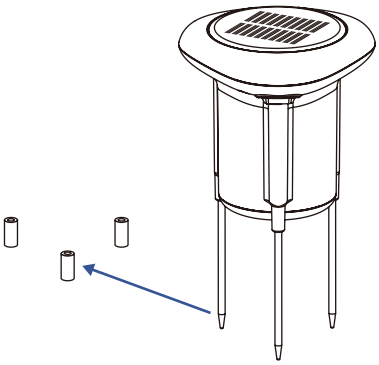

2. Insert the probe fully into the soil, ensuring the entire sensing area is buried. Do not leave any part of the probe exposed.

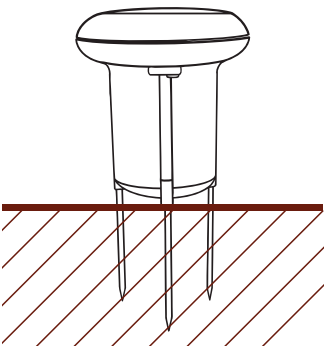

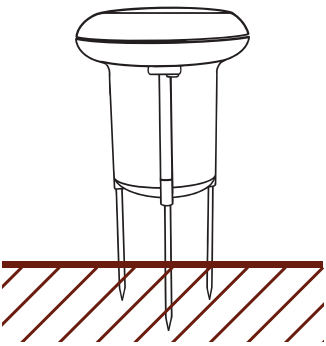

Correct Usage

The entire length of each probe must be surrounded by soil to guarantee accurate temperature, moisture, and EC readings.

Incorrect Usage

If the probes are only partially inserted and the soil does not fully cover their effective sensing area, the sensor may produce inaccurate or inconsistent results.

Installation, Continued

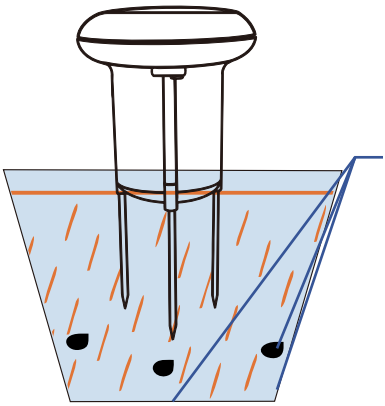

Avoid placing the probe near rocks, the edge, or the bottom of a pot/container to prevent damage and ensure accuracy.

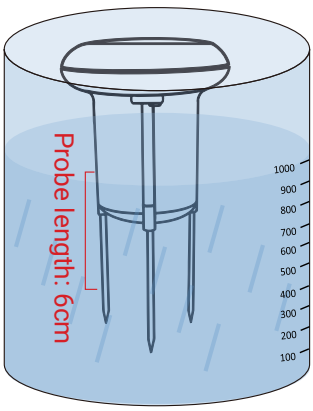

How to Calibrate to 100% Moisture
To simulate 100% soil moisture:

1. Fill a container with **1000ml of water.**

2. Place the sensor in the **center of the container**; ensure the probes are submerged in water by at least **2.76 inch (7cm)** and not touching the sides or bottom.

3. Press the set button once submerged. The sensor will immediately measure and report updated temperature, moisture, and EC values in the app.

4. If the moisture reading changes slowly, **press the set button multiple times** for quicker data refresh.

Usage Guidelines

Not suitable for small indoor pots:
Small pots or metal containers may interfere with probe positioning and affect detection accuracy.

Garden Use:
For **dense lawns**, trim or clear the grass layer before inserting the sensor to ensure full soil contact.

Installation, Continued

For **flower beds**, position the sensor at least **4 inch (10cm)** away from any borders or walls to avoid edge effect on the probes.

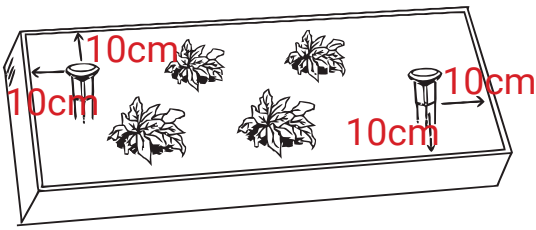

Moisture Fluctuations & Weather Changes:
After a transition from **rainy to sunny** or **sunny to rainy**, soil moisture readings may change significantly.

Moisture can change by more than **5% within** one hour.

Temporary moisture dips followed by gradual increases are normal after a weather shift.

J About Sensor Refresh Rates

To provide the long battery life typical of YoLink sensors, your Soil Detector does not transmit readings in real time. Instead, it updates only when certain conditions are met during a scheduled detection interval:

- Your high or low temperature alert level has been reached
- Your high or low humidity alert level has been reached
- Your high or low electrical conductivity alert level has been reached
- The sensor has returned to a normal, non-alert, range
- When temp is over 32°F(0°C), at least 0.9°F (0.5°C) change;
  When temp is between 14°F(-10°C) and 32°F(0°C), at least 2.7°F (1.5°C) change.
- At least 5% change
- The SET button has been pressed
- Otherwise, once per hour

J About Sensor Refresh Rates, Continued

Note: These conditions are checked only at each detection interval. The detection interval takes absolute priority—readings are evaluated only when the scheduled detection interval is reached. The default interval is 5 minutes and can be adjusted from 1 to 60 minutes.

App Functions: Device Screen

In the app, tap on your Solar Soil Detector icon. Your Solar Soil Detector main screen should be similar to the one shown below.

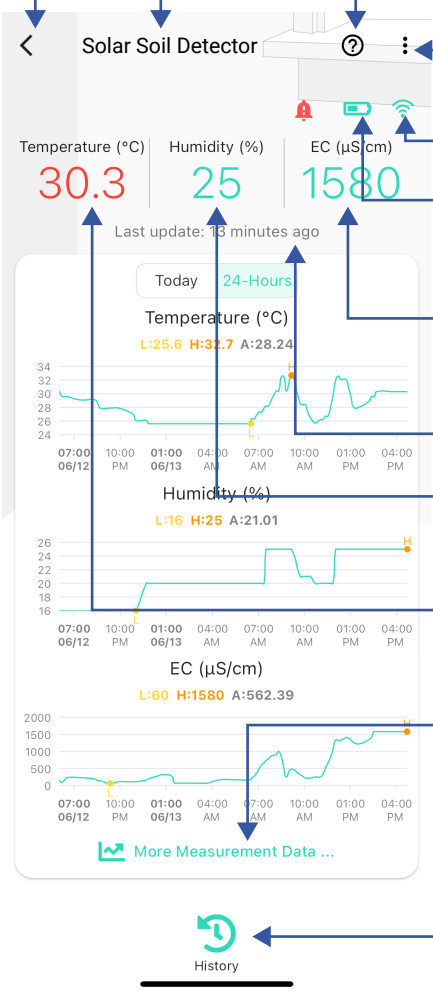

Tap to exit this screen

Device name

Tap for contact & support resources

Tap for device Details screen

Signal strength

Battery Level
Green = batteries are good
Red = replace batteries soon

Latest Refresh Conductivity
Green: Normal; Red: Warning

Last Update Time

Latest Refresh Humidity
Green: Normal; Red: Warning

Latest Refresh Temperature
Green: Normal; Red: Warning

Tap to view and export historical temperature, humidity and conductivity data charts

Device Alert History
Tap to view and download alert historical logs

App Functions: Device Details Screen

Tap the three dots (in the upper right corner) to open the Solar Soil Detector **Details** screen. Your Solar Soil Detector screen should be similar to the one shown below.

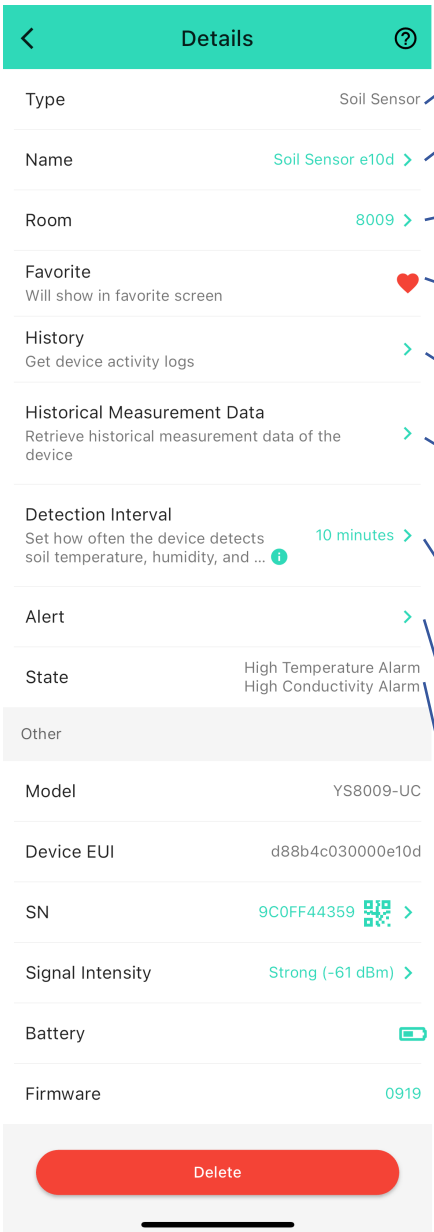

Device Type

Device Name
(Tap to Edit)

Room
(Tap to Edit)

Favorite
(Red if Favorite, Tap to Edit)

History
Tap to view device history

Tap to view and export historical temperature, humidity and conductivity data charts

Detection Interval
Tap to set how often the device detects soil temperature, humidity and conductivity

Alert
Tap to edit Alert Settings (see Alert Settings)

Device State

App Functions: Device Details Screen, Continued

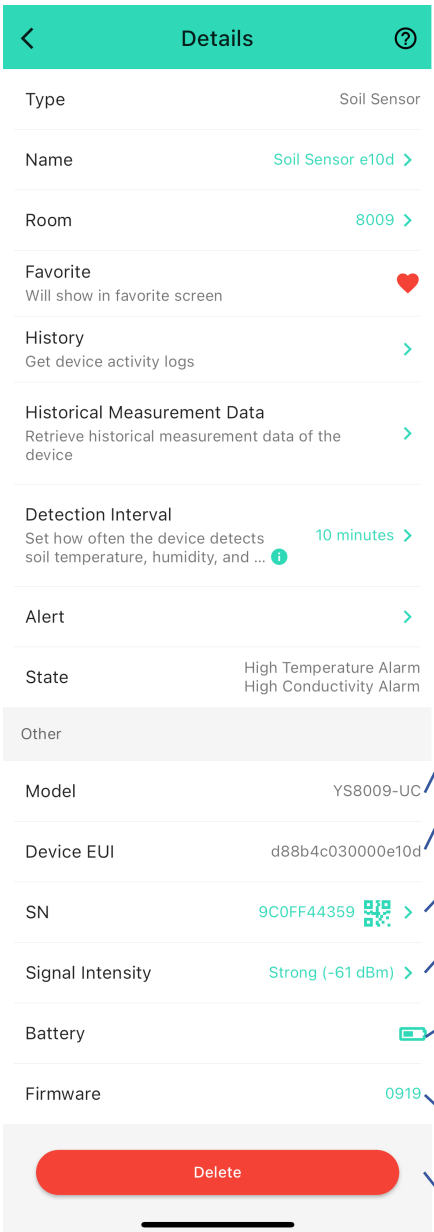

Model Number

Device EUI
Unique Identifier Number (Unique)

Device Serial Number

Signal Intensity
(From YoLink Hub)

Battery
Battery level indicator. If red, batteries are low; replace batteries soon.

Firmware Revision
(Refer to page 28)

Remove Device From Current Account
Tap to delete the device from your YoLink account

App aFunctions: Alert Settings Screen

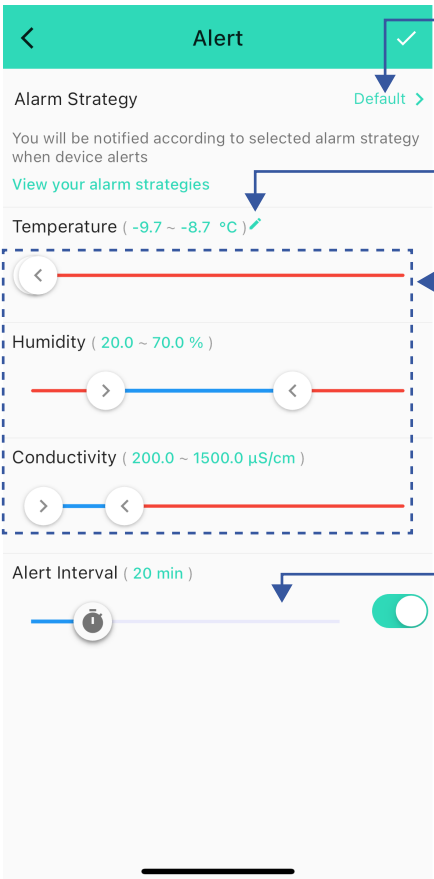

Alarm Strategy
Tap to edit the sensor's Alarm Strategy

Tap here to open the digital temperature alert settings

Tap the slider control and adjust the high or low alert value. The "normal" range will be displayed in blue text as a low alert value, to the high alert value.

Alert interval
Choose how often you want to be reminded after an alert.

App Functions: Chart Screen

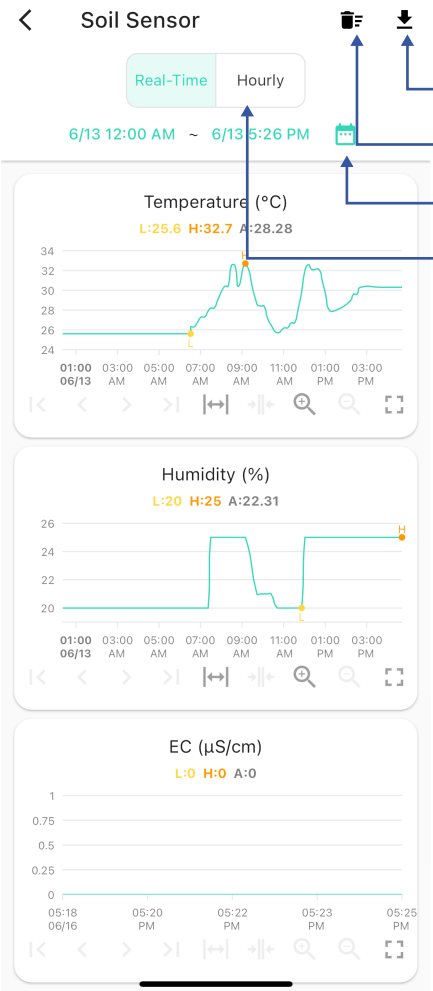

Tap to export data

Tap to clear data

Tap to select time range

Tap to select real-time or hourly data

App Functions: Alarm Strategy Screen

You can set up notifications in Alarm Strategy settings, make sure you have enabled App, Email, SMS notification from the app->Menu->Settings->Account Settings->Advanced Settings, and verified your email address and added your phone number in the app.

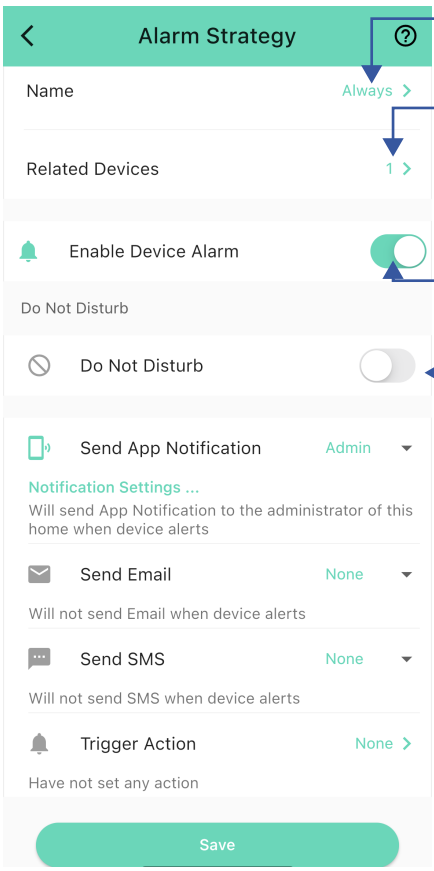

Strategy Name
Tap to edit the name

Related Devices
Tap to add more devices (that can alert) to this strategy, a device can be related to only one strategy

Tap to enable or disable the strategy

Tap to set up DND (Do Not Disturb)

App Functions: Alarm Strategy Screen, Continued

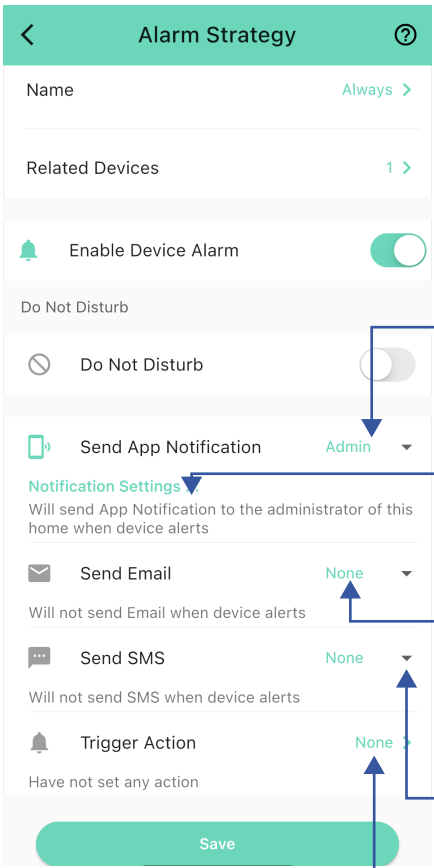

Send App Notification
Tap to select Admin to enable App push, select All, if desired for all members

Notification Settings (iOS only)
Tap to change notification tone, if desired

Send Email
Tap to select Admin to enable email notification, select All, if desired to send to all members

Send SMS
Tap to select Admin to enable limited text messages, select All (subscribe required-starter or standard plan), if desired to send to all members

Trigger Action
Tap to choose trigger actions (YoLink sirens, YoLink SpeakerHubs, scene)

App Functions: Automation

The Solar Soil Detector can be set up as a condition in an automation. For example, you can automatically turn on a valve if the sensor detects a low humidity. This example is shown below. The automation also sends a custom notification (via app push notification, email SMS, or SpeakerHub broadcast) reminding you the sensor detects high or low temperature.

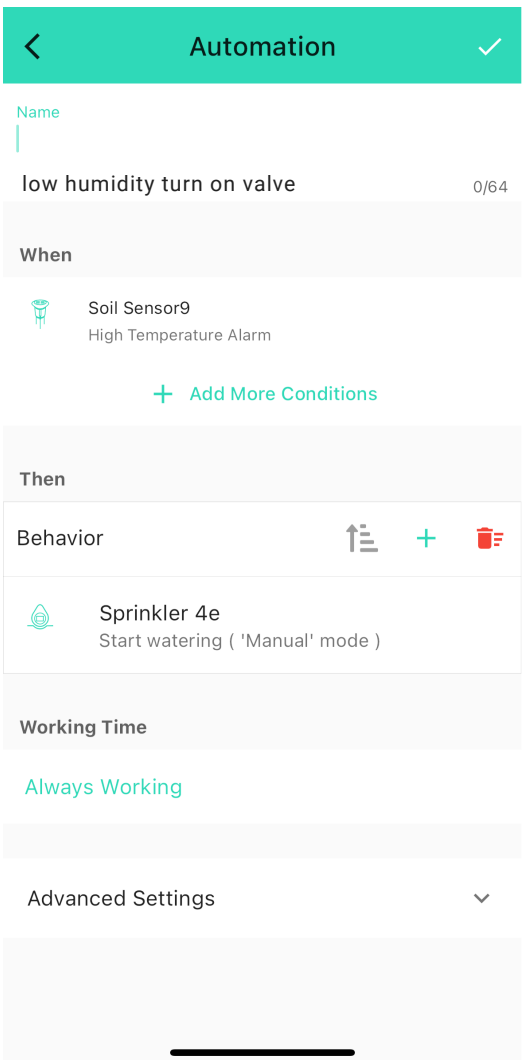

3rd-Party Services

The YoLink Solar Soil Detector works with several voice assistants, including Alexa and Google, and it works with other automation platforms such as IFTTT.

To set up voice assistant integrations, in the app, go to Settings, Third-Party Services, and follow the instructions.

Please note, IFTTT supports Solar Soil Detector as a trigger action (High Temp, Low Temp, High Humidity, Low Humidity, High Conductivity, or Low Conductivity) in the routine.

Alexa now includes the capability to query the temperature of a device and utilizes the Solar Soil Detector for initiating trigger actions, based on high or low temperature (note that humidity-triggered actions are not supported). Notably, in the Alexa interface, these temperature conditions are represented as motion sensors. For instance, when setting up a routine in Alexa, you can select "Sunroom Temp Humidity | High Temperature - Motion Detected" as the condition under the "when" section to initiate the routine.

Google only supports querying the temperature or humidity of the devices.

For example, edit the name of the device in Alexa or Google to “Sunroom", then you can ask: “Echo, what is the sunroom temperature?"

You can also try, “Alexa, what is the temperature of the Sunroom sensor?"

R Specifications

Voltage:	Ni-MH rechargeable 1.2V AA*3
Device Current Draw:	≤ 135mA (operating) ≤ 220uA (standby , Check every 5 minutes)
Working Temperature:	-10°C ~ 60°C (14°F ~ 140°F)
Working Humidity:	≤ 95%RH (non-condensing)
Temperature detection accuracy:	0.5°C (1.9°F)
Temperature detection range:	-10°C ~ 60°C (14°F ~ 140°F)
Humidity detection accuracy:	3%
Humidity detection range:	0 ~ 100%
IP Rating:	IP66

R Specifications

Conductivity measurement accuracy:	3%F.S
Conductivity measurement range:	0 ~ 20mS/cm

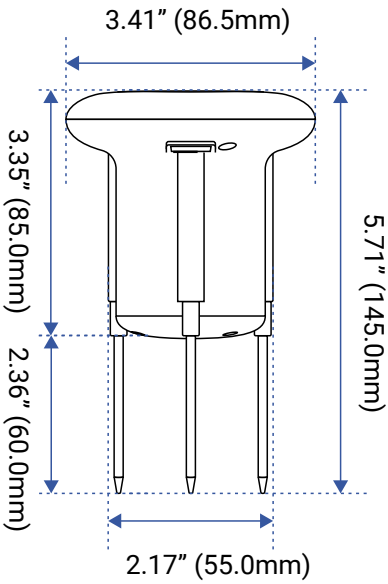

FRONT

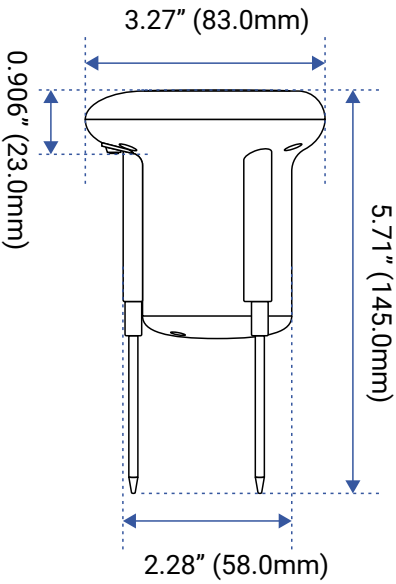

SIDE

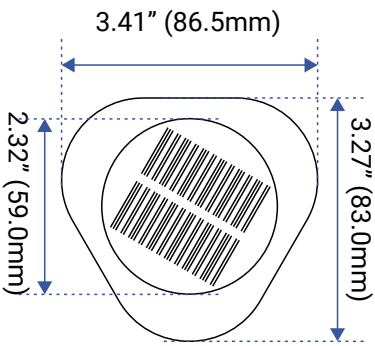

TOP

Factory Reset

When directed by customer support, and/or as an attempt to resolve a problem with your Solar Soil Detector, it may be necessary to perform a factory reset. Factory resetting your sensor returns it to the factory default programming and settings. This is a simple process:

> Hold the SET Button for 20 to 30 seconds, until the LED blinks red and green alternately, then release the button.

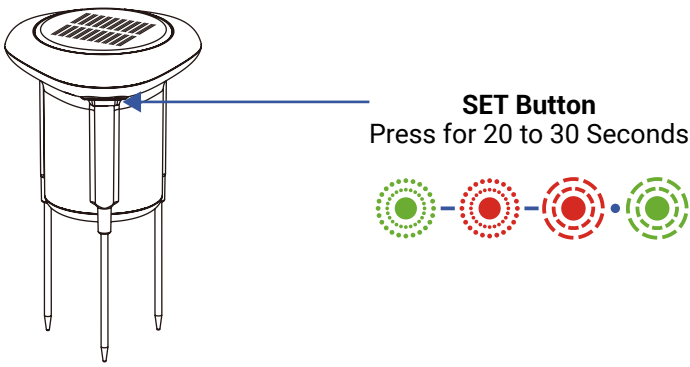

Factory reset is complete when the LED stops flashing.

Only deleting a device from the app will remove it from your account.

Firmware Updates

Your YoLink products are frequently being improved, with new features and functions added over time. It is periodically necessary to make changes to your device firmware. For optimal performance of your device, and to give you access to any improvements made to your device model, these firmware updates should be installed (added to your device) when they become available.

In the **Details** screen of your device, you will see the Firmware section, as shown in the image below. A firmware update is available if it says "#### ready now" (where #### is a four-digit combination of letters and/or numbers).

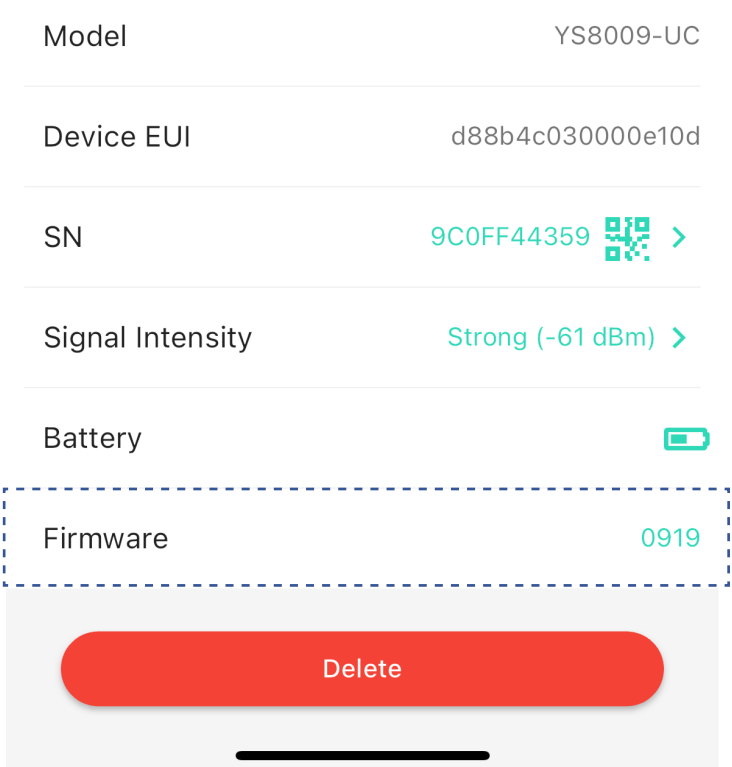

Firmware Updates, Continued

Firmware is like settings in your sensor that define the overall operations of the sensor. These settings are added to the sensor when it is manufactured, and they are periodically updated, as needed, to add improvements, new features, new integrations, etc, to your sensor, as they become available.

Tap in the Firmware area to start the update, press the SET button. The sensor will update automatically, indicating the progress by percentage-complete. You may use your sensor during the update process, as the update is performed “in the background”. You may see the LED slowly blink green during the update, and the update may continue for several minutes beyond the LED turning off.

If you experience incomplete firmware updates, please update only one device at a time. If this does not resolve the problem, please contact our customer support department!

U Warnings

For optimal performance and lifetime of your Solar Soil Detector, please adhere to the following warnings:

- Please install, operate and maintain the Solar Soil Detector only as outlined in this manual. Improper use may damage the unit and/or void the warranty.
- Use care when using any tools, as sharp edges and/or improper use can result in serious injuries.
- Refer to Specifications for the device environmental limitations.
- Do not install or use this device where it will be subjected to high temperatures and/or open flame.
- Do not use strong chemicals or detergents, which may discolor or damage the exterior and/or damage the electronics, voiding the warranty.
- Do not install or use this device where it will be subjected to physical impacts and/or strong vibration. Physical damage is not covered by the warranty.
- Please contact Customer Service before attempting to repair disassemble or modify the device, any of which can void the warranty and permanently damage the device.

V Warranty

2 Year Limited Electrical Warranty

YoSmart Inc. warrants to the original user (“customer”) of this product that it will be free from defects in materials and workmanship, under normal use, for 2 years from the date of purchase. This warranty does not apply to devices that have been improperly installed, modified, put to a use other than designed, or subjected to acts of God (such as floods, lightning, earthquakes, etc.). This warranty does not cover neglected or abused products. This warranty is limited to the repair or replacement of the device, only, at YoSmart's sole discretion. YoSmart will NOT be liable for the cost of installing, removing, nor reinstalling this product, nor direct, indirect, or consequential damages to persons or property resulting from the use of this product. This warranty only covers the cost of replacement parts or replacement units, it does not cover shipping & handling fees. The customer must provide proof of purchase, in the form of the original purchase invoice or order number. The purchase must have been made from an authorized seller.

To implement this warranty please contact us by one of the methods listed on the Contact Us page of this user guide.

FCC Statement

This device complies with part 15 of the FCC Rules. Operation is subject to the following two conditions: (1) This device may not cause harmful interference, and (2) this device must accept any interference received, including interference that may cause undesired operation. Any Changes or modifications not expressly approved by the party responsible for compliance could void the user's authority to operate the equipment.

Note: This equipment has been tested and found to comply with the limits for a Class B digital device, pursuant to part 15 of the FCC Rules. These limits are designed to provide reasonable protection against harmful interference in a residential installation. This equipment generates uses and can radiate radio frequency energy and, if not installed and used in accordance with the instructions, may cause harmful interference to radio communications. However, there is no guarantee that interference will not occur in a particular installation. If this equipment does cause harmful interference to radio or television reception, which can be determined by turning the equipment off and on, the user is encouraged to try to correct the interference by one or more of the following measures:

- Reorient or relocate the receiving antenna.
- Increase the separation between the equipment and receiver.
- Connect the equipment into an outlet on a circuit different from that to which the receiver is connected.

FCC Statement, Continued

- Consult the dealer or an experienced radio/TV technician for help.

The device has been evaluated to meet general RF exposure requirement. The device can be used in portable exposure condition without restriction.

PRODUCT NAME:
SOLAR SOIL DETECTOR

PARTY:
YOSMART, INC.

TELEPHONE:
831-292-4831

MODEL NUMBER:
YS8009-UC

ADDRESS:
25172 ARCTIC OCEAN DRIVE, SUITE 106, LAKE FOREST, CA 92630 USA

EMAIL:
SERVICE@YOSMART.COM

X Contact Us

We are here for you, if ever need any assistance installing, setting up or using a YoLink app or product!

Need help? For fastest service, please email us 24/7 at **service@yosmart.com**

Or call us at **831-292-4831** (US phone support hours: **Monday - Friday, 9AM to 5PM** Pacific)

You can also find additional support and ways to contact us at:
www.yosmart.com/support-and-service

Or scan the QR code:

Support Home Page

Finally, if you have any feedback or suggestions for us, please email us at
feedback@yosmart.com

Thank you for trusting YoLink!

YoLink Customer Support

YOLINK

25172 Arctic Ocean Drive, Suite 106 Lake Forest, CA 92630
© 2026 YOSMART INC. CALIFORNIA, USA